Mondella
ROCOCO

Rococo

400MM RAIN SHOWER HEAD

- Slim Design Shower Head.
- Highly Polished 304 Grade Stainless Steel.
- Suits all Standard Shower Arms.
- 400mm L x 400mm W.

Item Number
5003341

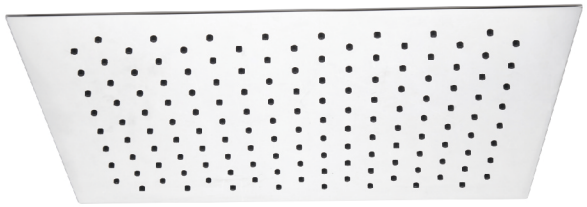

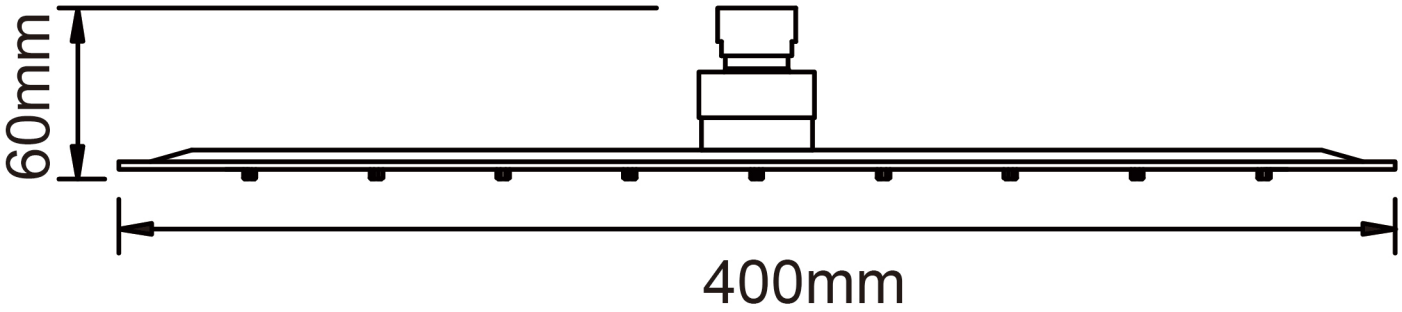

AS/NZS3662
WM74537
ApprovalMark

The more stars the more water efficient
WATER RATING
A joint government and industry program
Licence No.1101
Water Consumption
7.5
litres per minute
When tested at 150,250 & 350kPa in accordance with Standard AS/NZS 6400
For more information and to compare products, refer to:
www.waterrating.gov.au