evacare

INS E38 V1
24/05/18

INSTALLATION GUIDE
MODULAR GRAB RAIL

IMPORTANT

- For cavity walls, the grab rail must be fixed to the internal wall stud or a solid framing structure. This may require the grab rail to be installed on an angle to match the gap between the studs.
- The included fixings are for use with solid walls only. It is the installer's responsibility to ensure that the correct fixings are used to suit the wall type.

INSTALLATION

1. Temporarily assemble the grab rail (do not install the bolt covers at this stage) and position it on the wall in the desired location.
2. Mark around the ends of the grab rail.
3. Disassemble the grab rail and position the fixing brackets in the middle of the marks from step 2. Mark the drilling holes.
4. Using an appropriate drill bit (e.g. masonry bit for tiles), drill holes to suit the wall plugs. Note: ensure there are no hidden cables or pipes in the wall prior to drilling.
5. Insert wall plugs.
6. Install the nuts into the back of the brackets, then secure the brackets to the wall with the screws.
7. Position the grab rail onto the brackets and install the bolts.
8. Push the bolt covers into place.

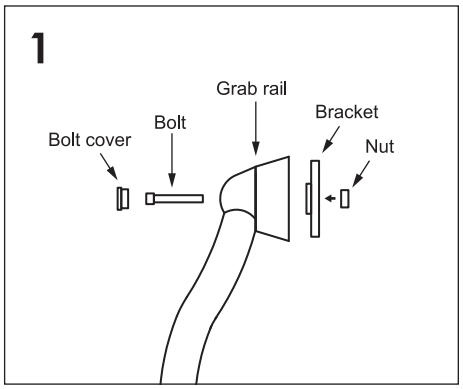

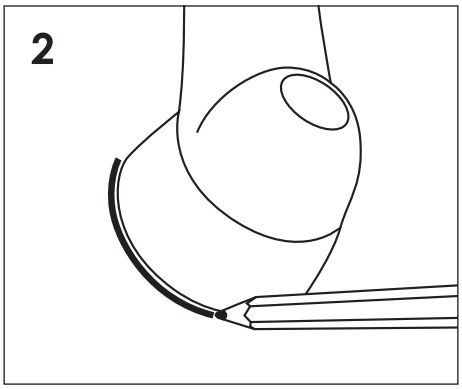

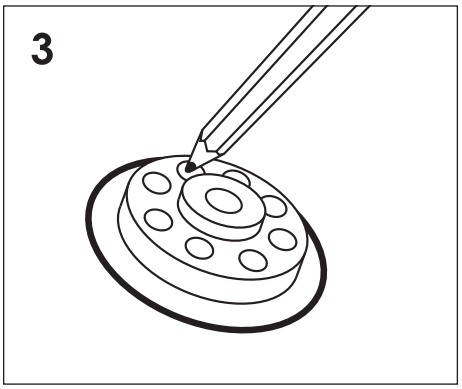

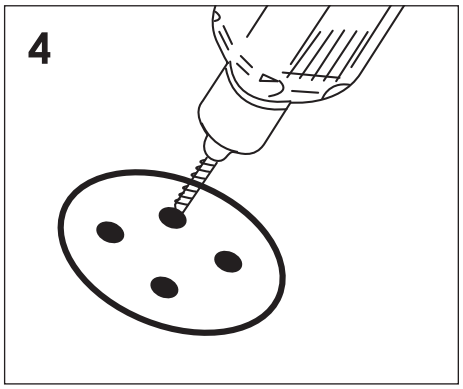

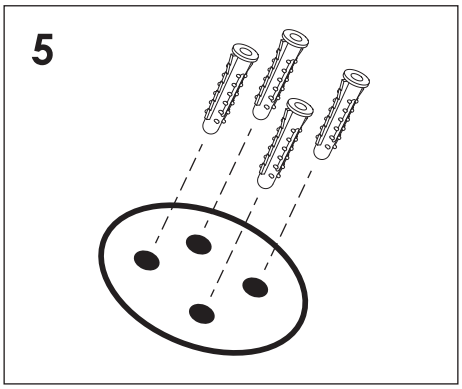

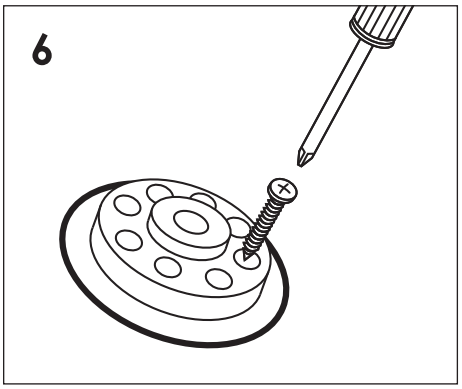

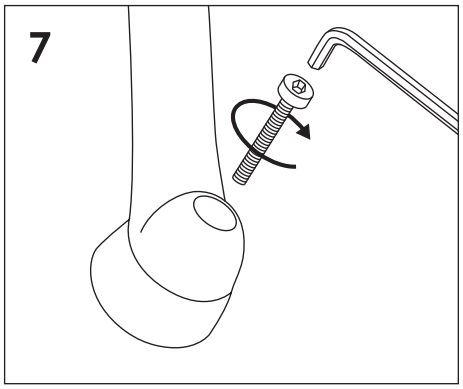

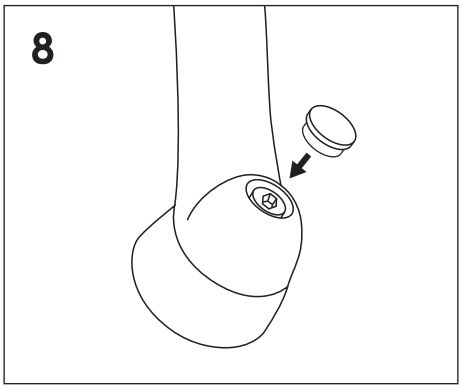

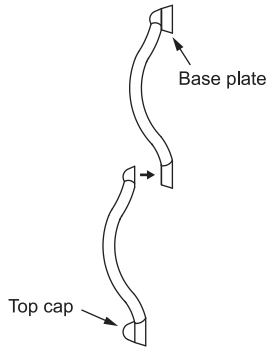

MODULAR

Multiple grab rails can be connected together by removing the base plate from one rail, and the top cap from the other rail. This allows you to create a custom setup.

CARE AND MAINTENANCE

- Clean with a soft cloth and warm soapy water.
- Do not use harsh detergents, corrosive chemicals, or abrasive cleaners.