MIMOSA
THE SIGNATURE COLLECTION

ASSEMBLY INSTRUCTIONS

OUTDOOR WOODEN GAZEBO

4.27L x 3.69W x 3.23H Metres

WITH GALVANISED ROOF

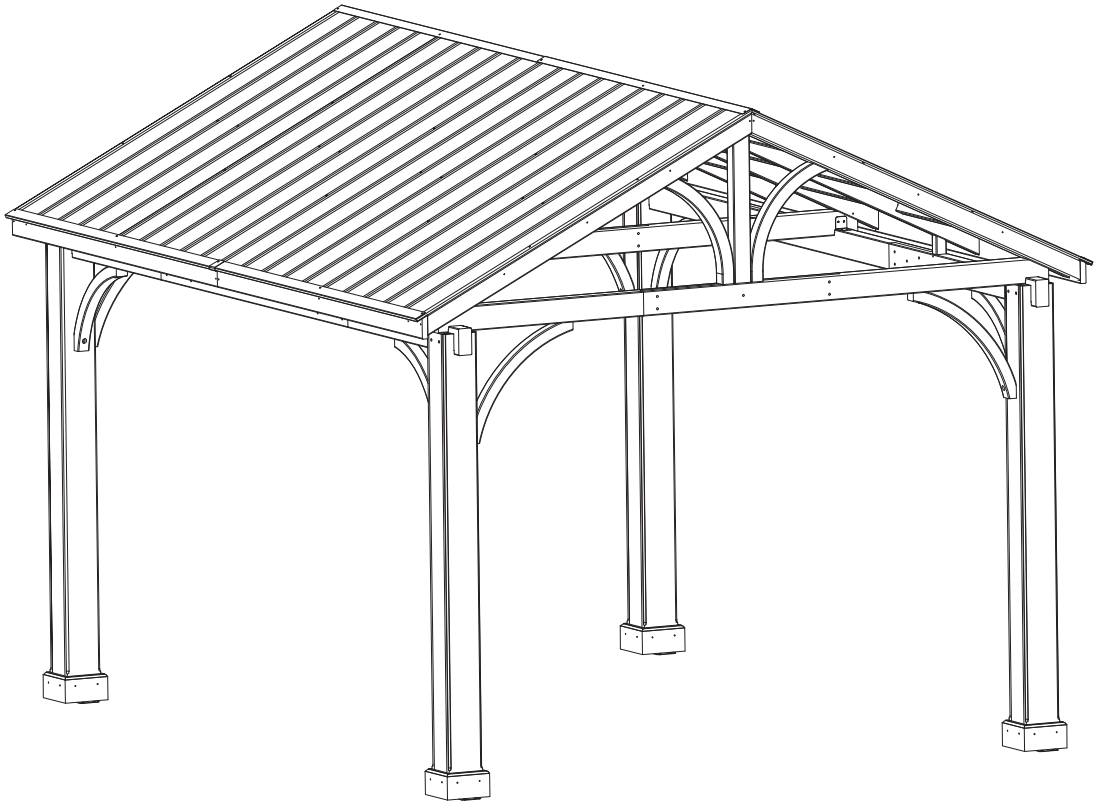

HEIGHT: 3.23M

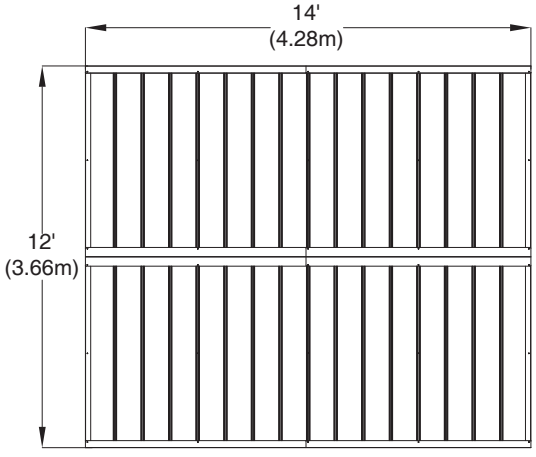

Warning

The ground for erecting and anchoring gazebo is requi red to be a level, solid and safe surface.

Beware existing utilities underground.

Keep away from any electrical installations and transportation devices.

Keep away flame or heat source (ex. fire pit, grills, etc.) from wood parts otherwise wood could burn and be damaged. Ensure safe clearance of Gazebo from heat source and do not use a BBQ under the Gazebo.

Never climb, sit or stand on structure anytime.

Regulation

It is the responsibility of consumer being in accordance with city regulation, construction code, zoning or any limitations and obtaining permit prior erecting the gazebo.

Recommendation

Read instruction manual and check all parts are included prior to erecting gazebo.

Use of safety production such as safety glasses and gloves are highly recommended

Use caution when handling parts as some may have sharp edges.

Take caution when using hand and power tools during assembly to avoid damage to parts.

Pre-drilling holes in timber may be required to avoid screws fastening on an angle or timber cracking.

Some steps will require 2-4 person to complete safely.

Please follow all recommendations carefully

Assembly and erecting can take approx five hours to complete for 2-4 people.

Ensure gazebo is anchored securely to avoid possible damage to surrounding area.

Ensure roof is clear of items and debris at all times.

Anchoring bolts and anchoring systems are not supplied.

Keep instruction manual for future reference.

Care

Always using water based paint to apply or repaint on all wooden surface whenever it is necessary

Warranty

Covered

Any claim under this warranty must be made within Two (2) years of the date of purchase. To make a claim under the warranty, take the product (with proof of purchase) to any Bunnings store (see ee www.bunnings.com.au for store locations). Bunnings Group Ltd will bear reasonable, direct expenses of claiming under the warranty. You may submit details and proof to our store for consideration. The warranty covers manufacturer defects in materials, workmanship and finish under normal use. This warranty is provided in addition to other rights and remedies you may have under Australian Consumer Law; our goods come with guarantees which cannot be excluded under Australian consumer Law.3. You are entitled to a replacement or refund for a major failure and to compensation for other reasonably foreseeable loss or damage. You are also entitled to have the goods repaired or replaced if the goods fail to be of acceptable quality and the failure does not amount to a major failure. This warranty is given by: Bunnings Group Ltd: PABN 26 008 672 179, 16-18 Cato Street, Hawthorn East, Victoria 3123, E-mail: I: customerservice@bunnings.com.au The warranty excludes damage resulting from product misuse or product neglect. The warranty covers domestic use only and does not apply to commercial applications.

Notcovered

All damage caused by commercial use, improper care, neglected storage, urreasonable or abusive use, modifications, vandalism chemical, freeze damage, extreme weather or act of God, rust oxidation, stains, improper packaging for return are not covered.

Normal discoloration or build-upof snow is not covered.

Appearance defects or anyother natural occurring properties of wood which do notaffect performa nce or integrity such as cracking, warping, and soon are not covered either.

Assembly Tools Required (Not Supplied):

8' Ladder x 1 / 6' Ladder x2 / Tape Measure / L-Square Rule / Carpenters Water Level Rule / Drill / Hammer /Screwdriver or Power Screwdriver / Safety Glasses /Hard Hat / Safety Gloves

Below symbols are placed at the top of each page as a guide for what may be required.

Use ladder(s).

Use tape measure to make sure the distances between posts are correct

Some steps are required for at least 2-4 adults for erecting.

Use L-square rule tomake sure the parts positions are correct.

Use hammer to secure stakes into ground.

Use level rule to make sure the crossbars are level.

When fasten the screw to wood part, set the function to lower speed, pre-drill a small hole for positioning and preventing screw slanted or wood cracking.

Reminder: Before assembly, don't forget to check inside of each Post (No.A&B), some parts are well packed and stored inside.

A

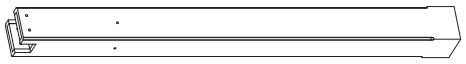

The first Post (No. A)

N		1
K	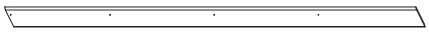	1

A

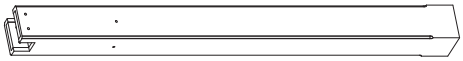

The second Post (No. A)

N		1
K	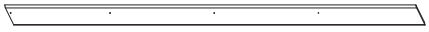	1

B

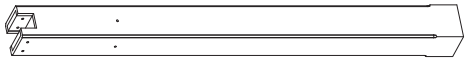

The third Post (No. B)

N		1
K	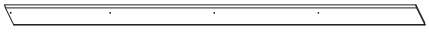	1

B

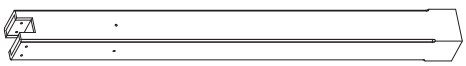

The fourth Post (No. B)

N	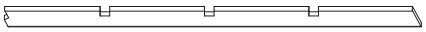	1
K	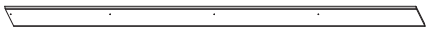	1

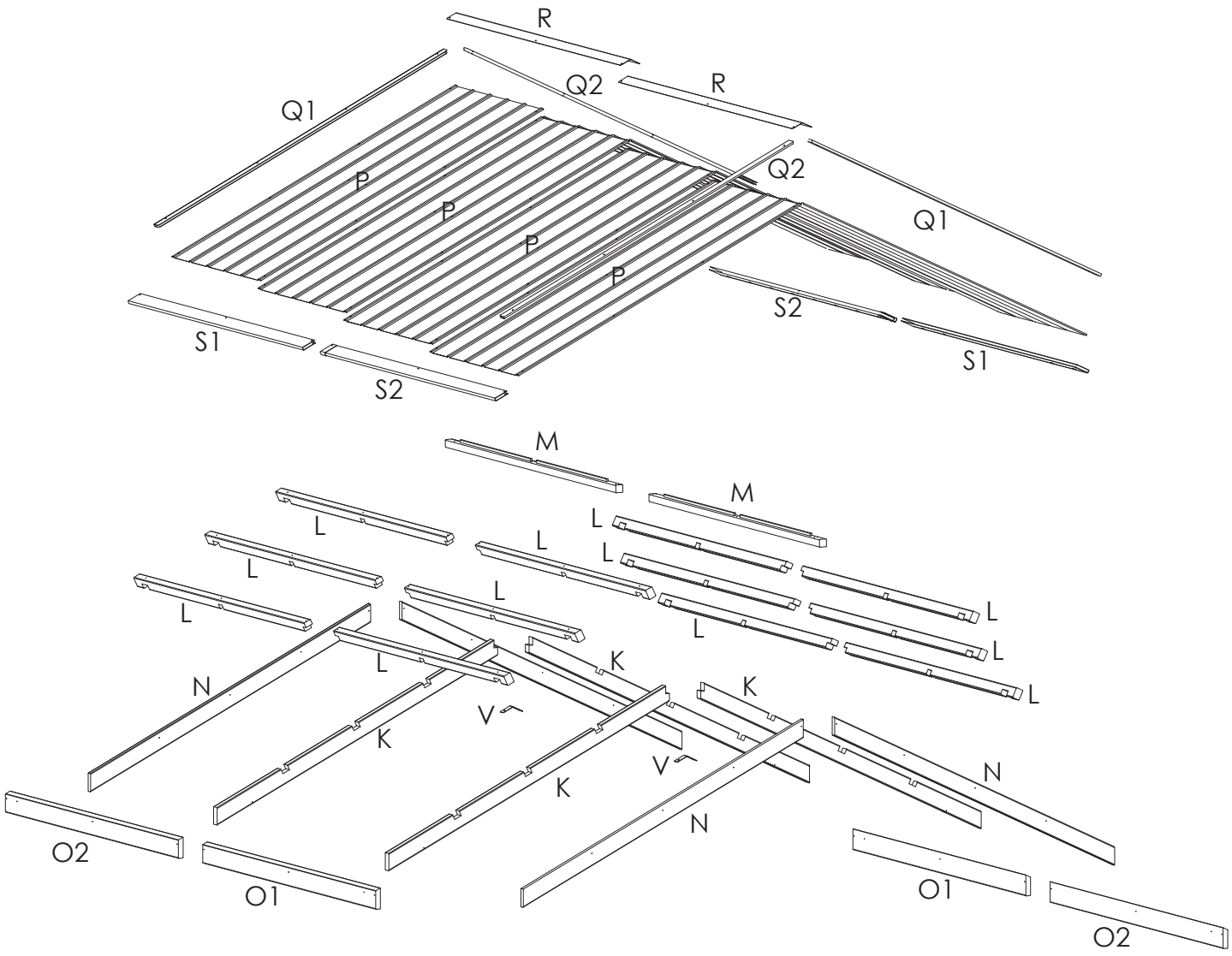

PARTS LIST:

K	Roof rafter	4
L	Roof support rafter	12
M	Roof rafter	2
N	Roof rafter	4
O1	Side rafter	2
O2	Side rafter	2
P	Roof panel	8

Q1	Roof panel cap	2
Q2	Roof panel cap	2
R	Roof cap	2
S1	Roof panel profile	2
S2	Roof panel profile	2
V	V shape bracket	2

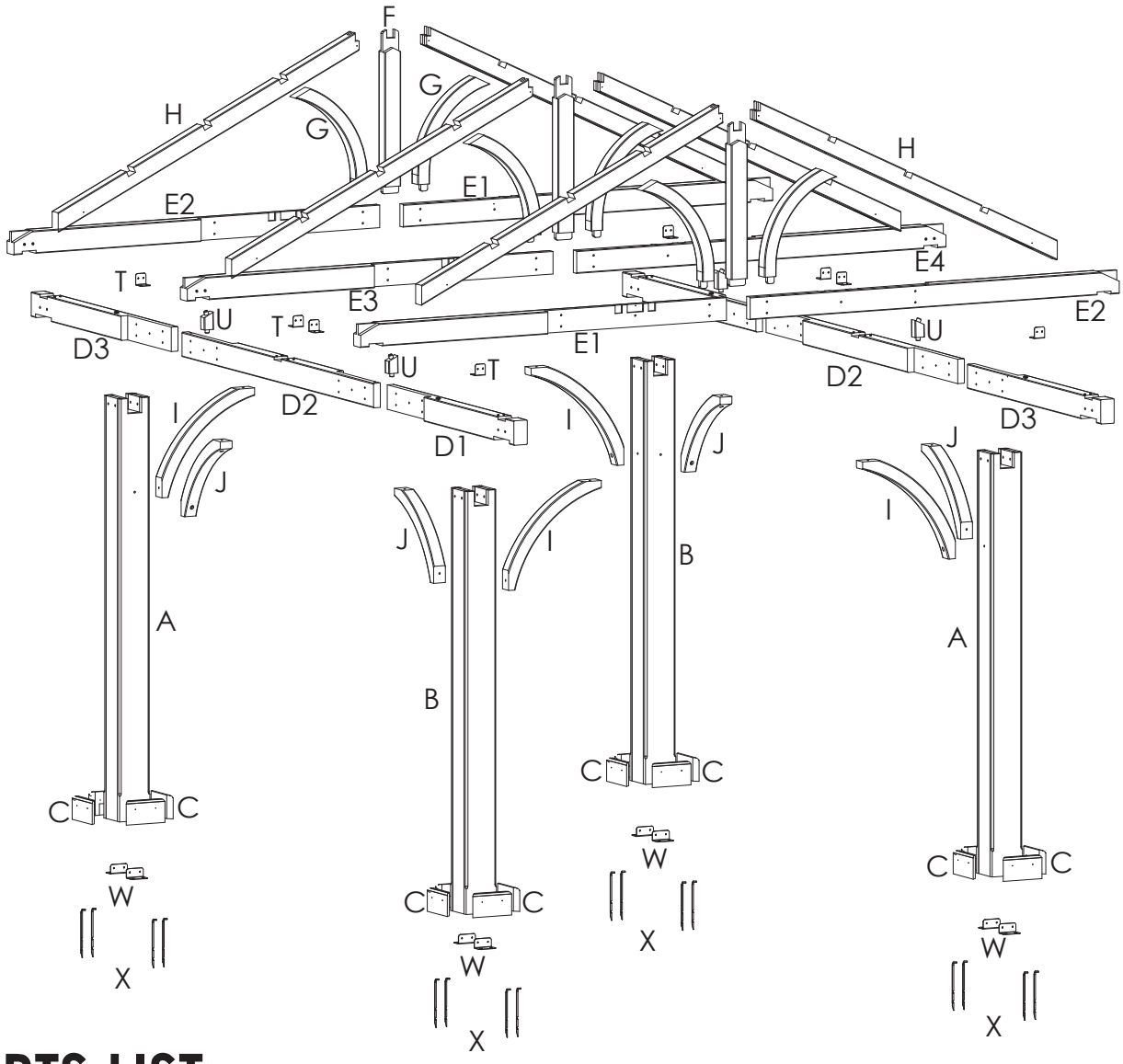

PARTS LIST:

A	Post	2
B	Post	2
C	Base cap	16
D1	Long crossbar for 14' side (Right)	2
D2	Long crossbar for 14' side (Middle)	2
D3	Long crossbar for 14' side (Left)	2
E1	Short crossbar for 12' side (Left)	2
E2	Short crossbar for 12' side (Right)	2
E3	Short crossbar for 12' side (Left)	1
E4	Short crossbar for 12' side (Right)	1

F	Roof rafter	3
G	Roof rafter	6
H	Roof rafter	6
I	Corner supporter (Right)	4
J	Corner supporter (Left)	4
T	L shape bracket	8
U	Support wood	4
W	Base flange	8
X	Stake	16

Hardware Kit:

AA	Bolt	8	M10 X 180mm
BB	Bolt	51	M8 X 70mm
CC	Self tapping screw	108	M6 X 40mm
DD	Wood Bolt	141	M5 X 50mm
EE	Washer	8	M10
FF	Washer	35	M8
GG	Washer	16	M8
HH	Plastic Washer	56	M6
II	Spanner	2	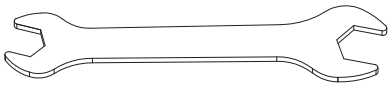
JJ	Spanner	1	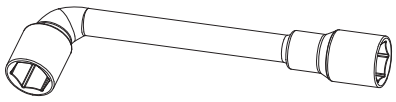

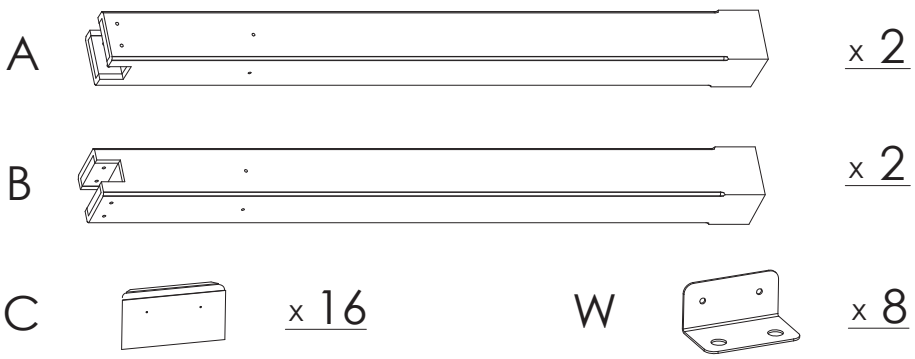

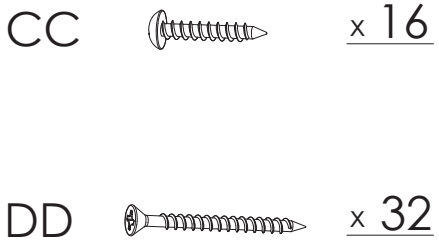

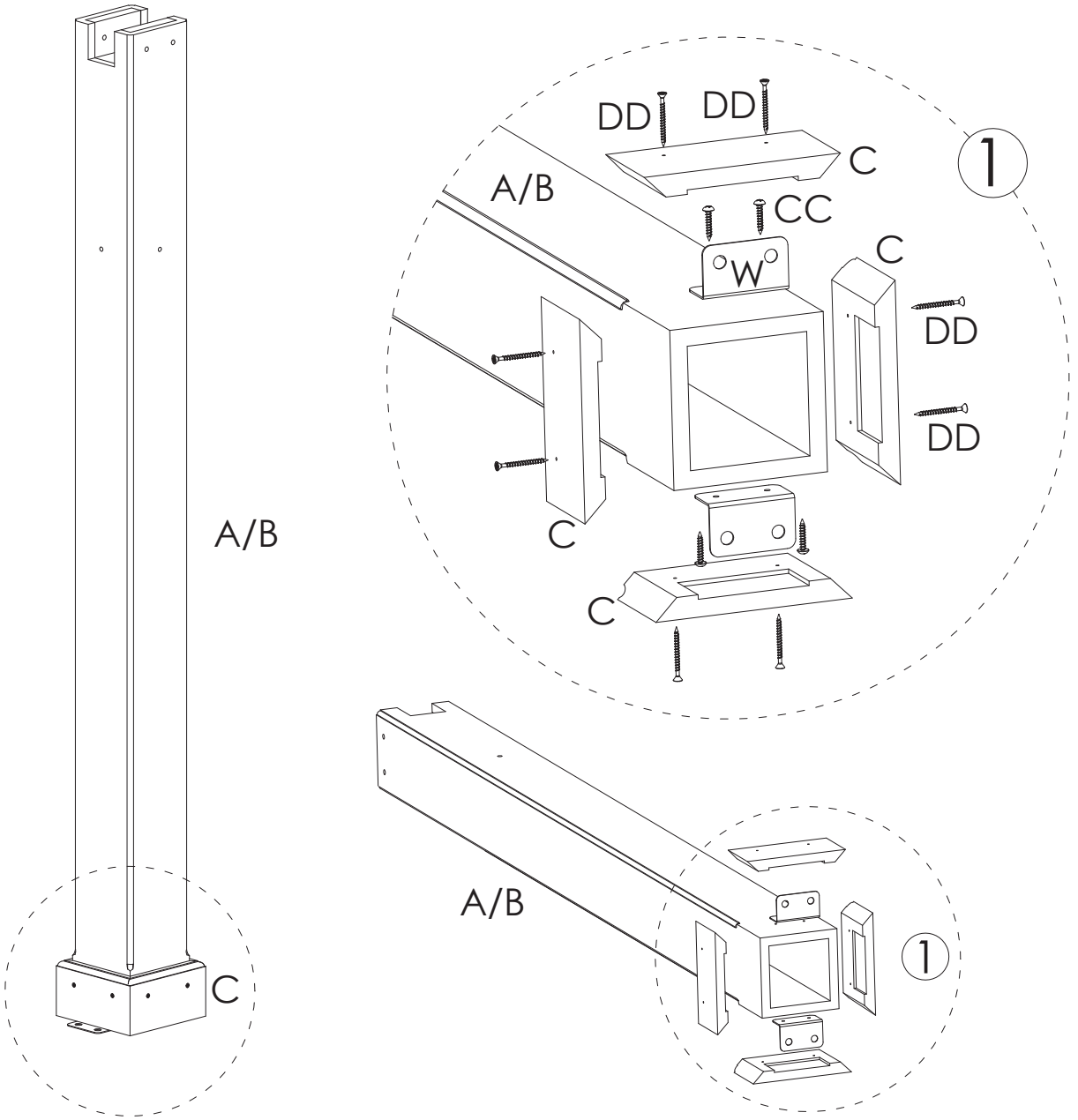

Step 1: Post with Ba se Flange and Base Cap

Secure base flange (W) on the bottom of post (A) by using self tapping screws (CC). Then secure base cap (C) by using wood bolts (DD) as shown in fig. 1.
Repeat these steps for all rest posts (A / B).

D1	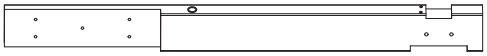	x 2	BB		x 20
D2	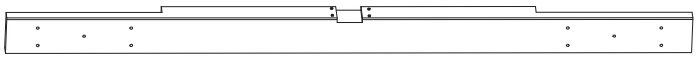	x 2	FF		x 20
D3	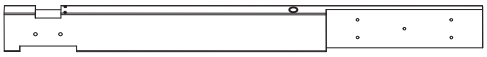	x 2	II		x 1

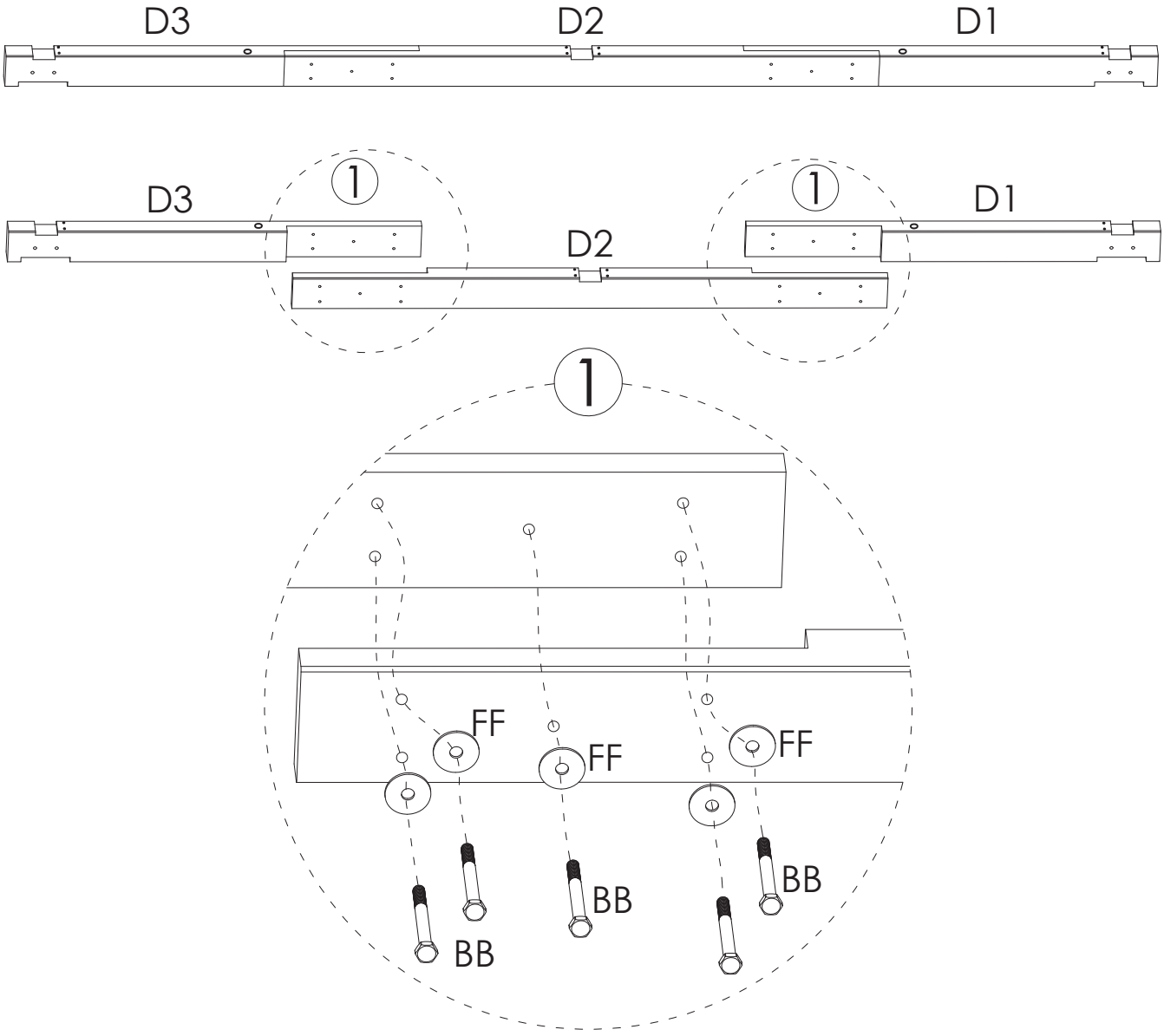

Step 2: Two Long Cross bar Sets

Connect right, middle and left long crossbars (D1&D2&D3) by using bolts (BB) & washers (FF) as shown in fig. 1.

Repeat this step foanother long cross bar set (D1&D2&D3).

E1 x 2

E2 x 2

BB x 10

FF x 10

II x 1

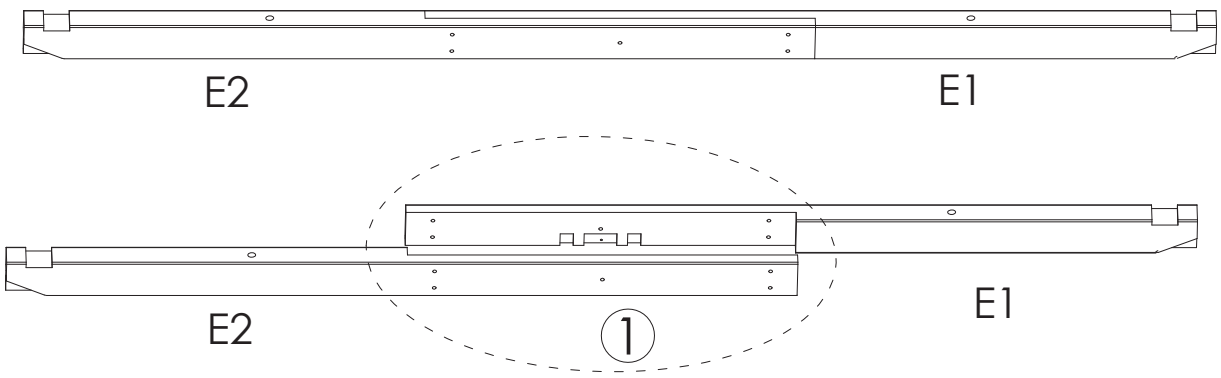

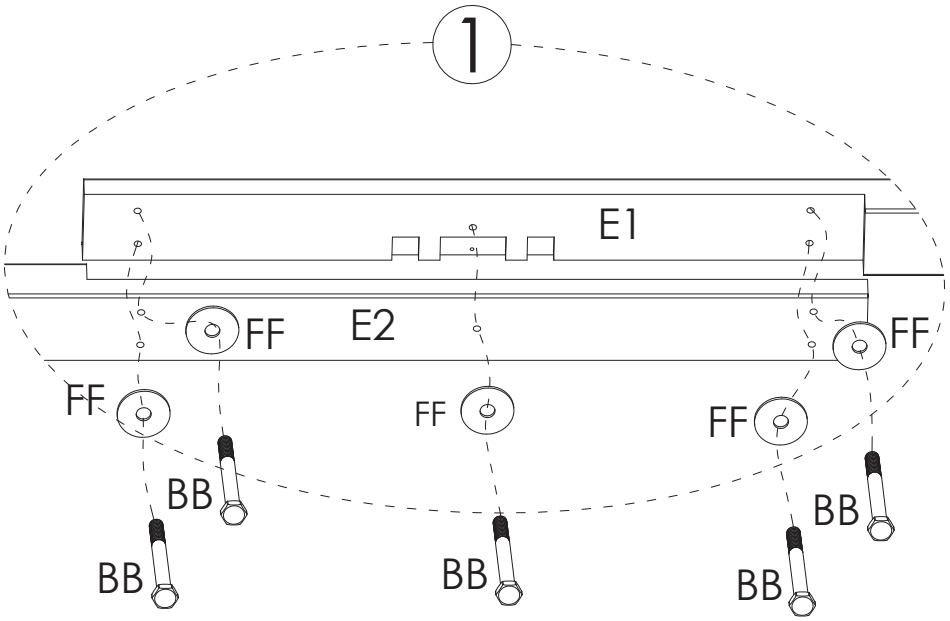

Step 3: Two Short Cross bar Sets

Connect left and right short crossbars (E1&E2) by using bolts (BB) & washers (FF) as shown in fig. 1.

Repeat this step for another short crossbar set (E1&E2).

E3	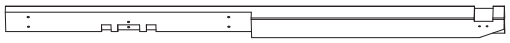	x 1	BB		x 5
E4		x 1	FF		x 5
			II		x 1

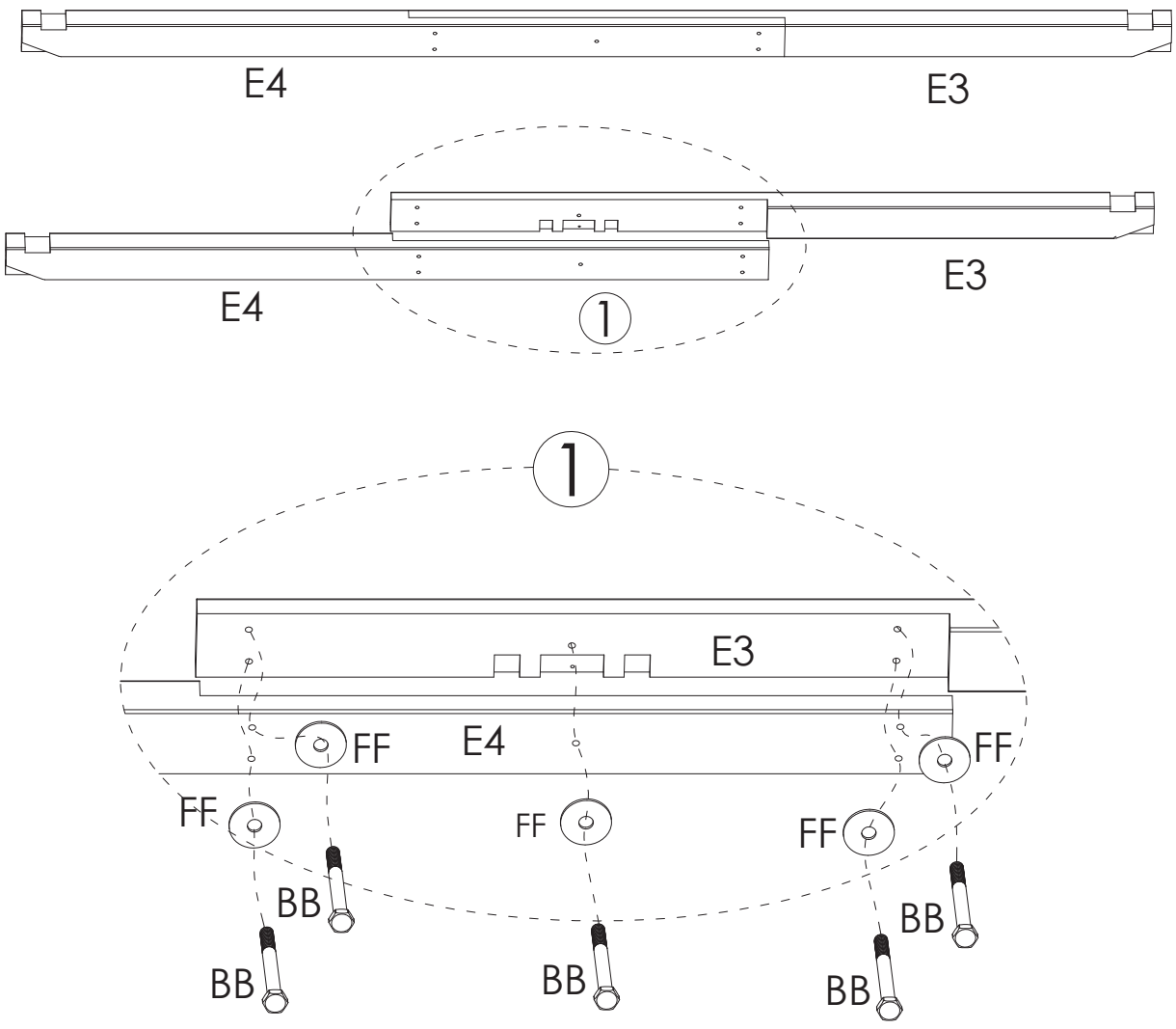

Step 4: Middle Short Cross bar Set

Connect left and right short crossbars (E3&E4) by using bolts (BB) & washers (FF) as shown in fig. 1.

F x 2

G x 4

H x 4

DD x 14

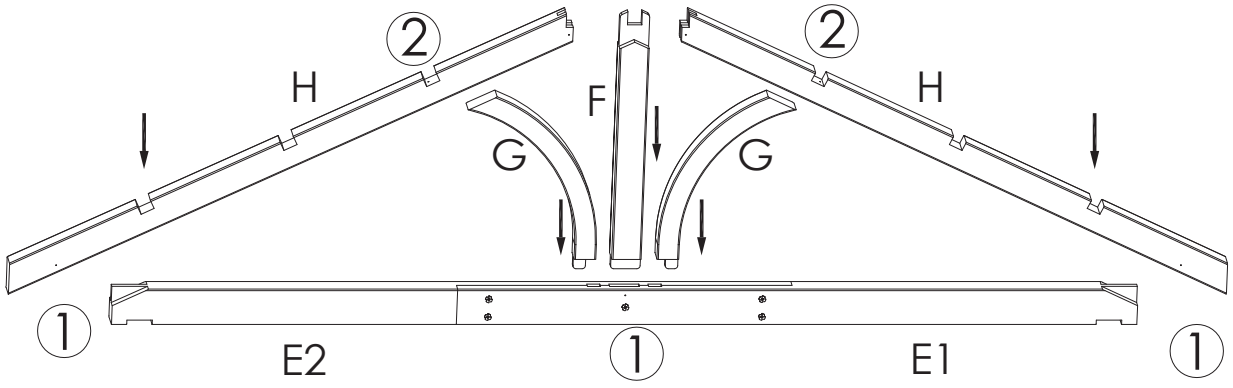

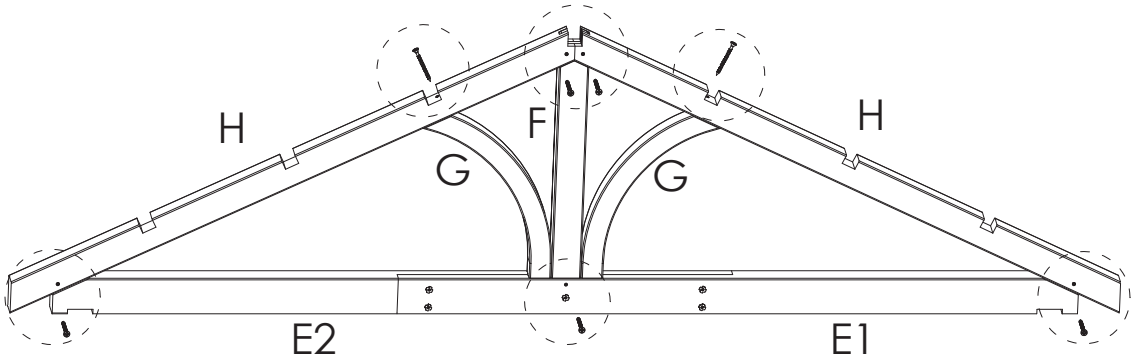

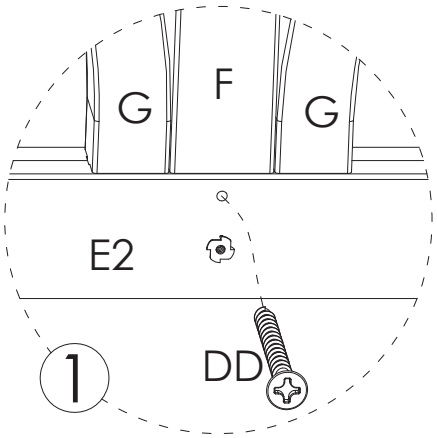

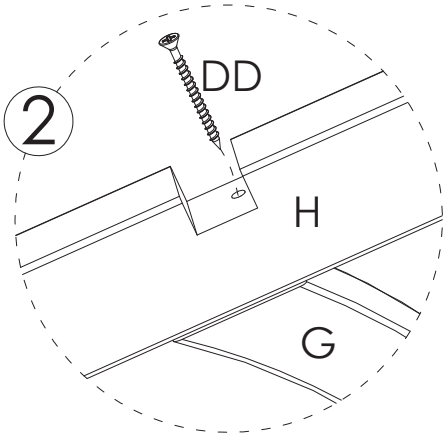

Step 5: Roof Truss Sets

Secure roof rafters (G&F) on short crossbar set (E1&E2) by using wood bolt (DD)align the partin position as shown in fig. 1.

Then insert roof rafters(H) on this set and secure by using wood bolts (DD) as shown in fig 2.

Repeat same procedure for remaining parts to make another roof truss set (E1,E2,F,G,H)

F x 1

G x 2

H x 2

DD x 7

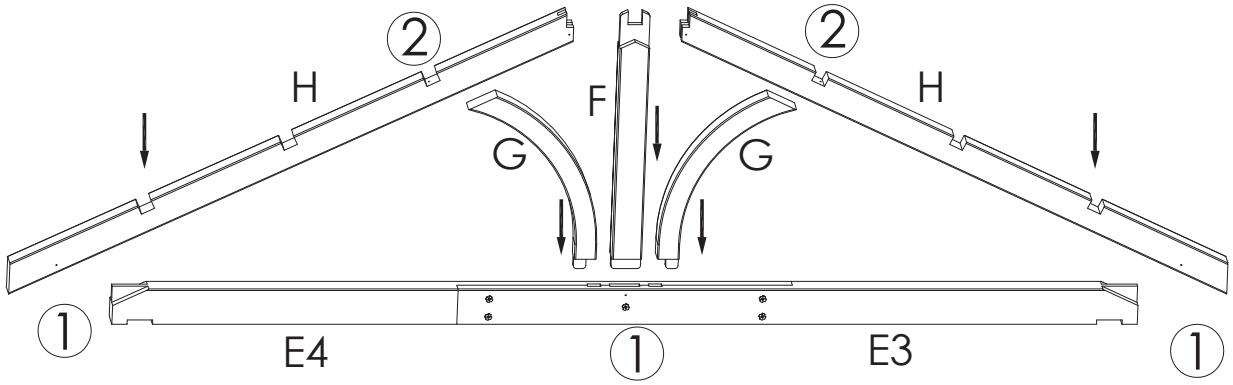

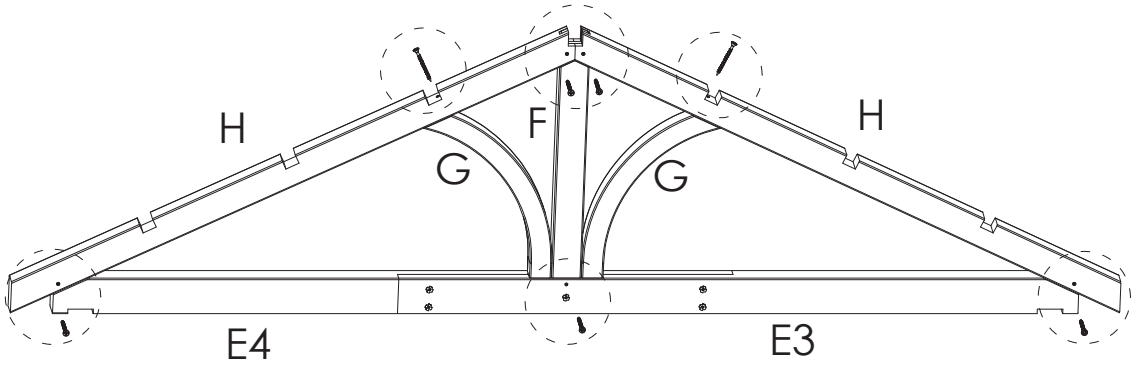

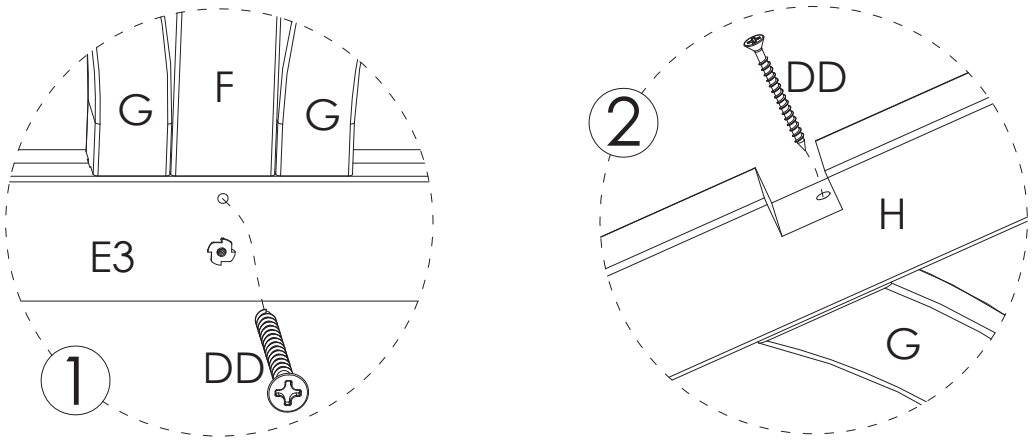

Step 6: Middle Roof Truss Set

Secure roof rafters (G&F) on short crossbar set (E3&E4) by using wood bolt (DD)align the part in position as shown in fig. 1.

Then insert roof rafters(H) on this set and secure by using wood bolts(DD) as shown in fig 2.

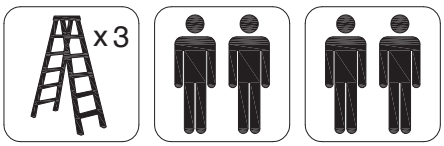

AA		x 8	II		x 1
EE		x 8			

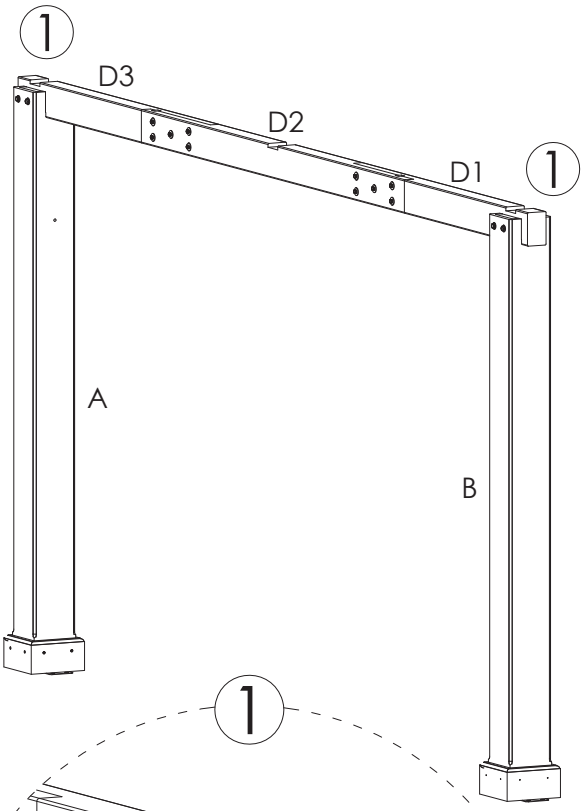

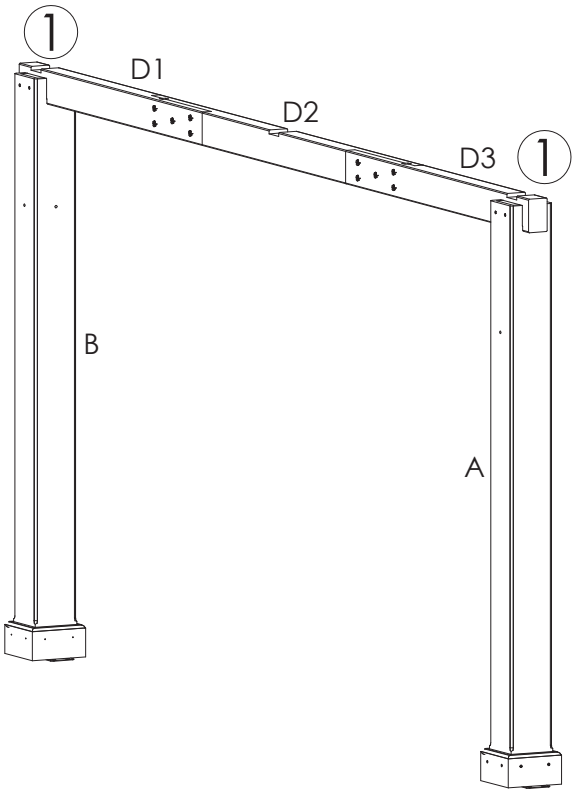

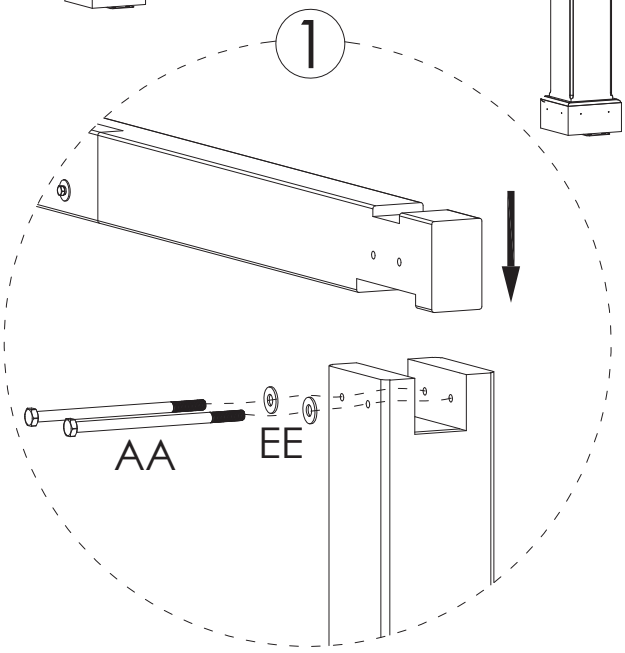

Step 7: Post and Long Cross bar Set

Note: Before the following step, make sure the ground is flat and level. For your security, 4 adults for assembling are required since this step.

Secure long crossbar set (D1&D2&D3) of step 2 on two posts (A&B) by using bolts (AA) and washers (EE) as shown in fig. 1.

Repeat same procedure for another set.

T	x 4	CC	x 16

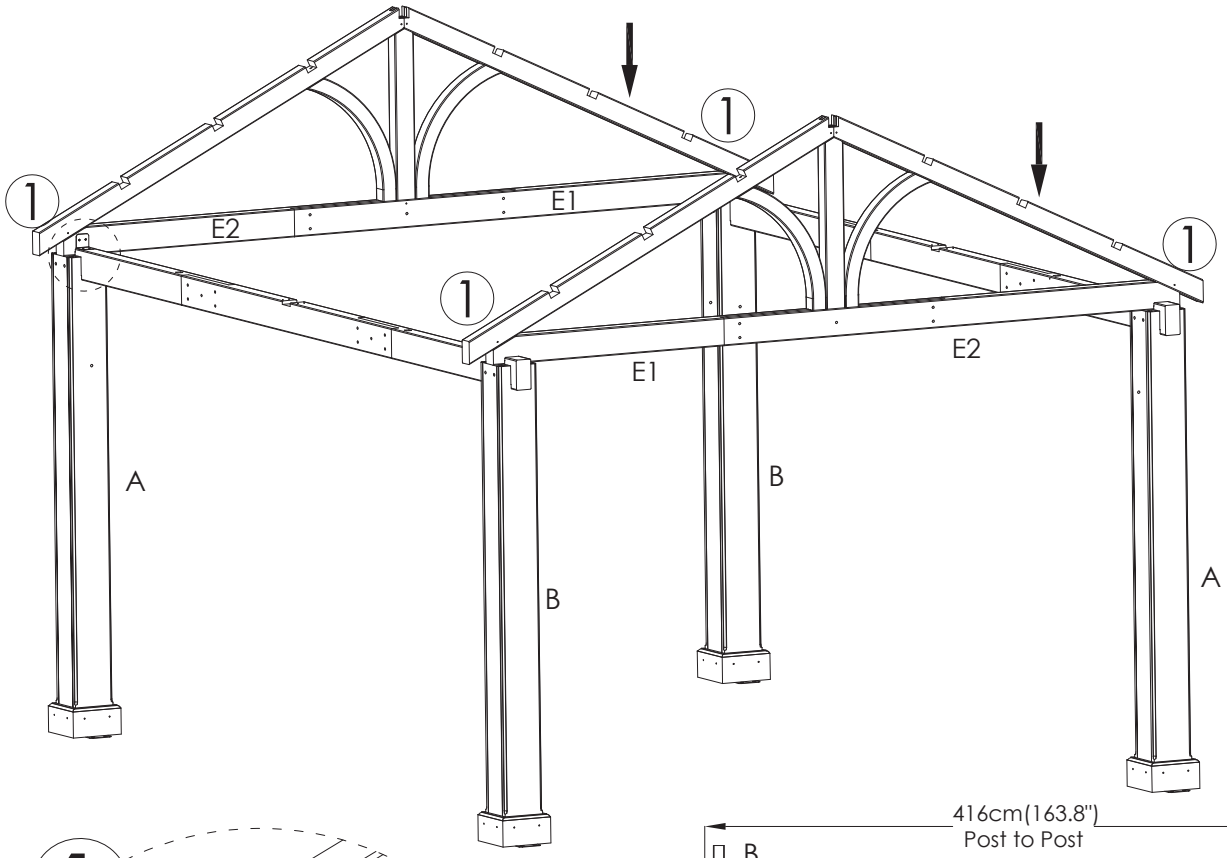

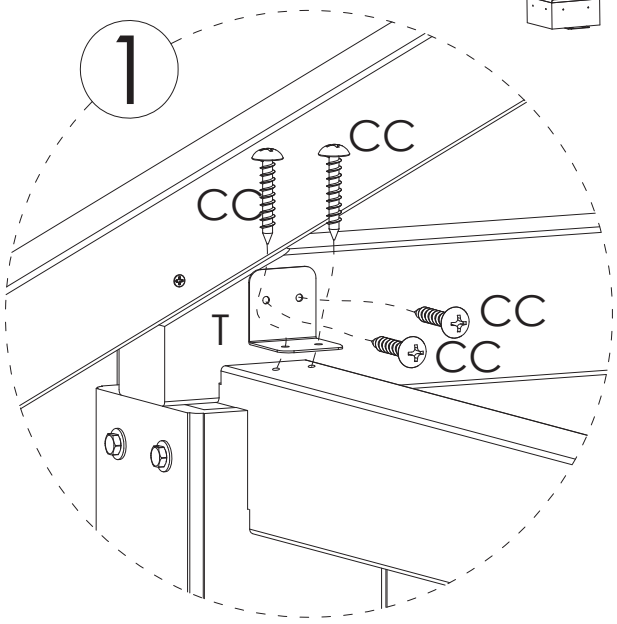

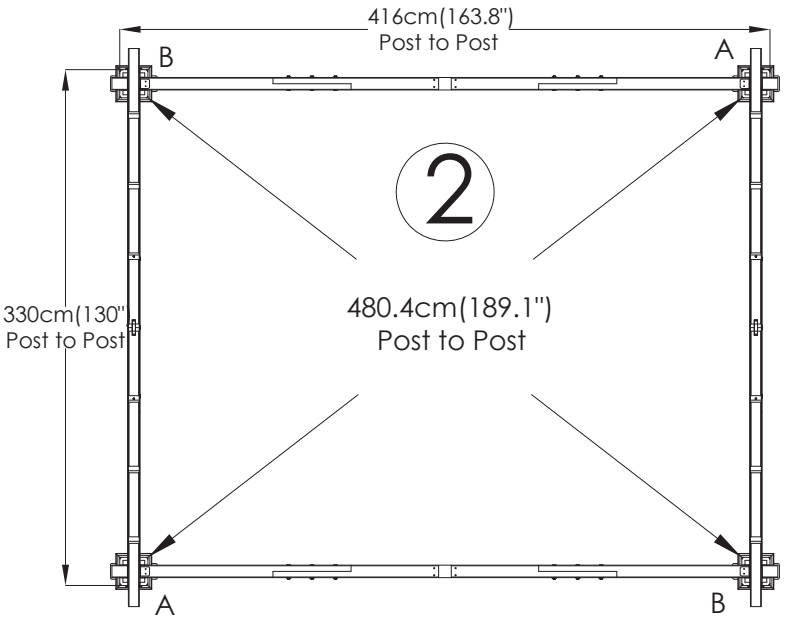

Step 8: Posts, Cross bar Sets and Roof Truss Set

Secure assembled roof truss (G&F&E1&E2&H) of step 5 on assembled posts and long crossbar set (A&B& D1&D2&D3) of step 7 by using self tapping screws (CC) through L shape brackets (T) as shown in fig. 1.

Repeat same procedure for the opposite side.

Make sure each corner is square and level. Accurate and make sure the distances between post and post (A-B), (B-A) (A-A), (B-B) are same as shown in fig. 2.

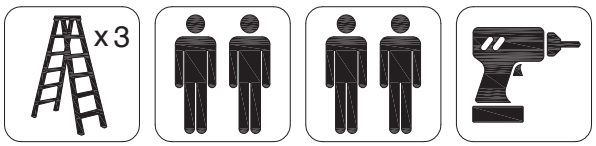

T		x 4	CC		x 16

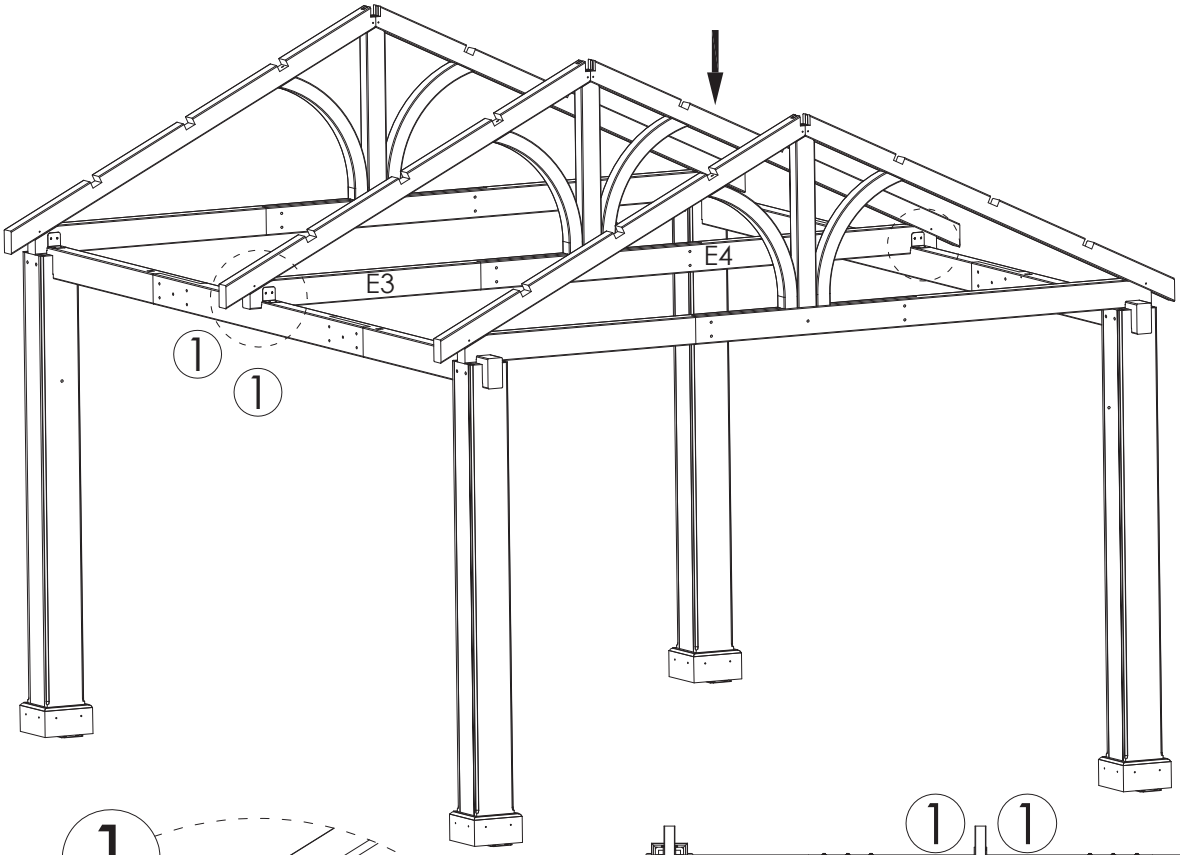

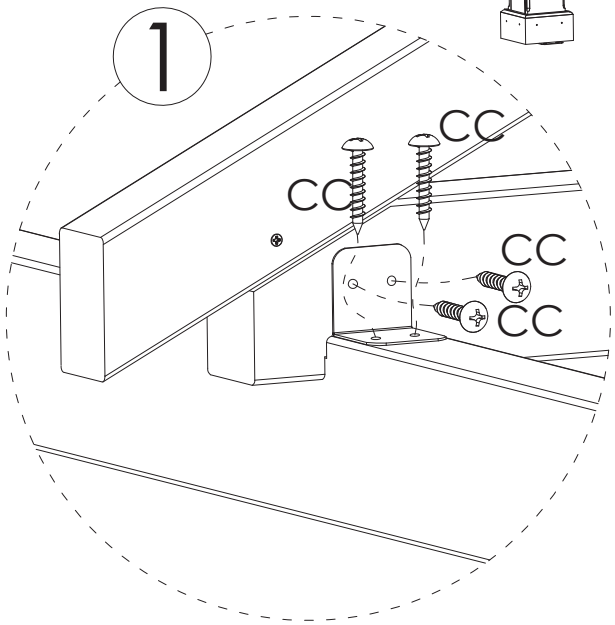

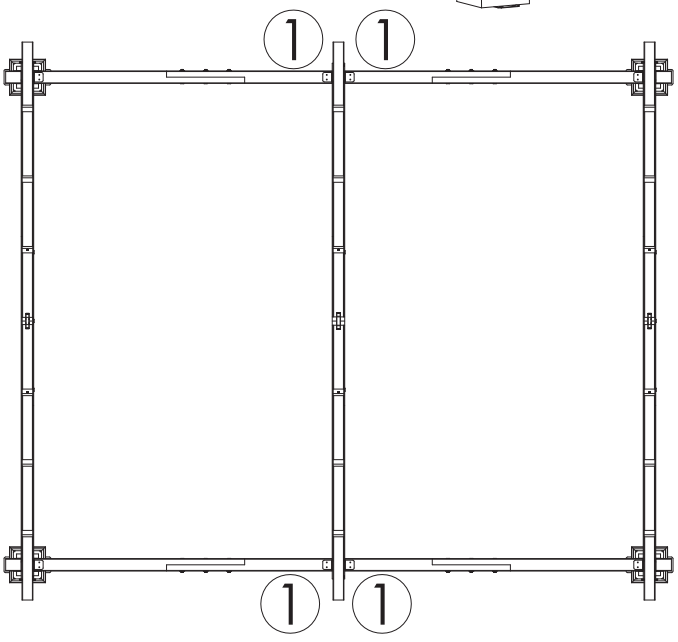

Step 9: Crossbar Sets and Middle Roof Truss Set

Secure assembled roof truss (G,F,E3,E4&H) of step 6 on the middle of assembled posts and long crossbar set (A,B,D1,D2&D3) of step 7 by using self tapping screws (CC) through L shape brackets (T) as shown in fig. 1 and fig. 2.

I		x 4
J		x 4

BB		x 16
GG		x 16
JJ		x 1

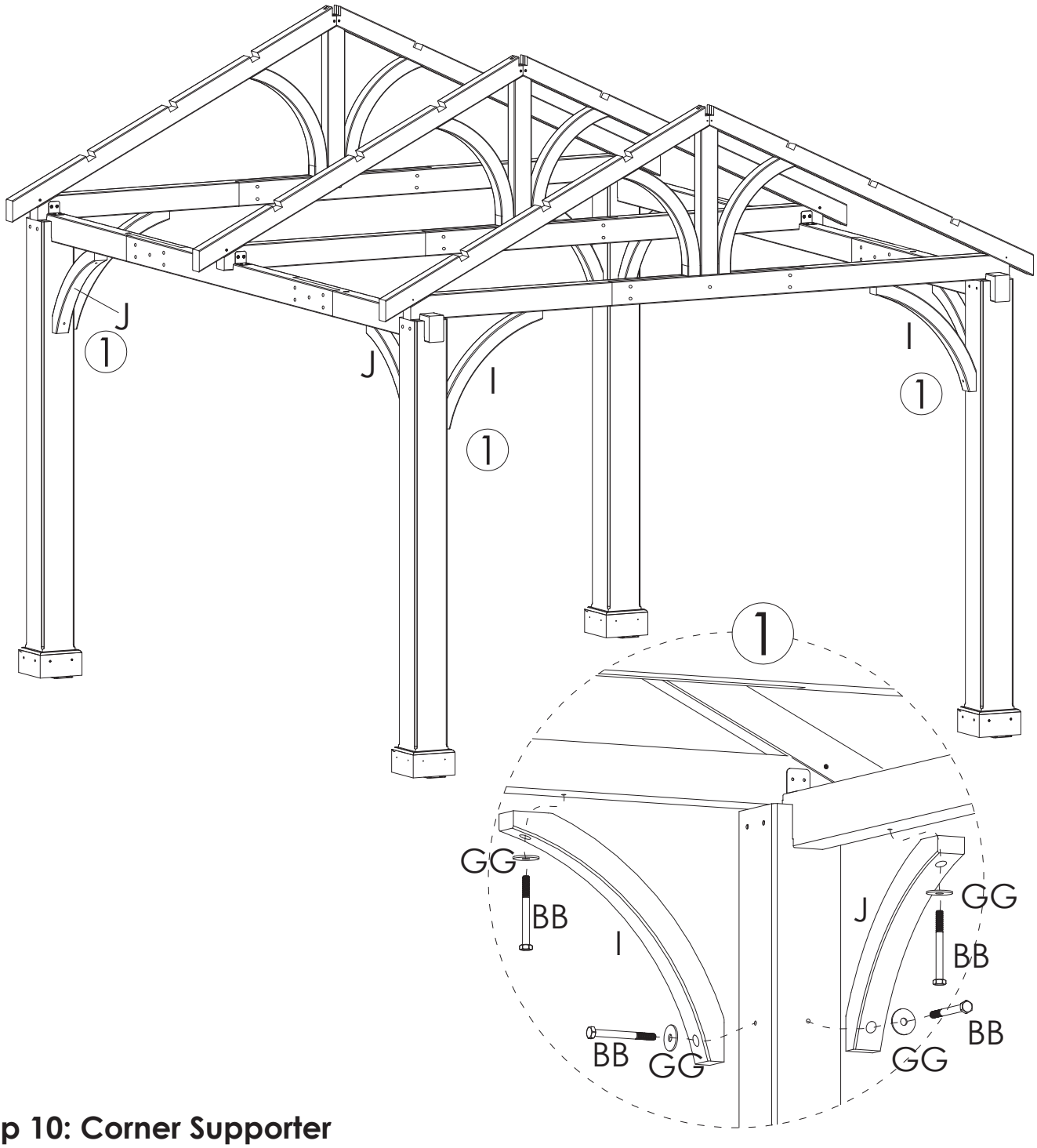

Step 10: Corner Supporter

Secure right corner supporter (I) to post (A) and short cross bar set (E1&E2) by using bolts (BB)& washers (GG) as shown in fig. 1.

Secure left corner supporter (J) to post (A)and long crossbar set (D1&D2&D3) by using bolts(BB) & washers (GG)as shown in fig. 1.

Repeat same procedures for the remaining corners.

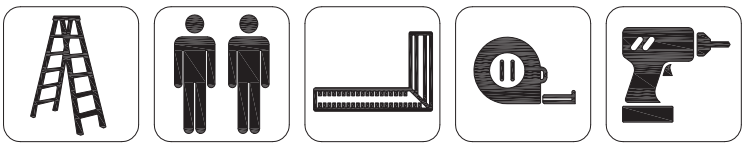

M x 2

DD x 8

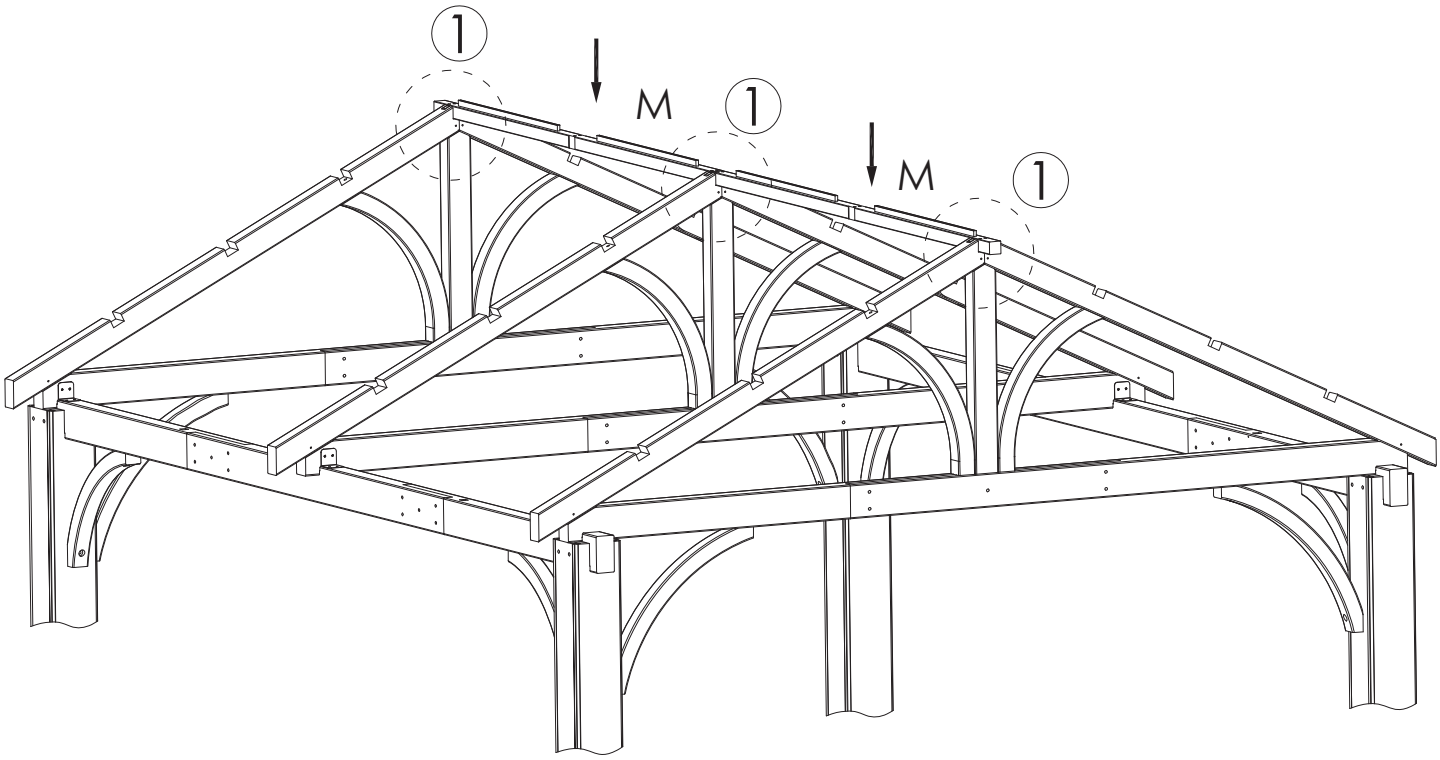

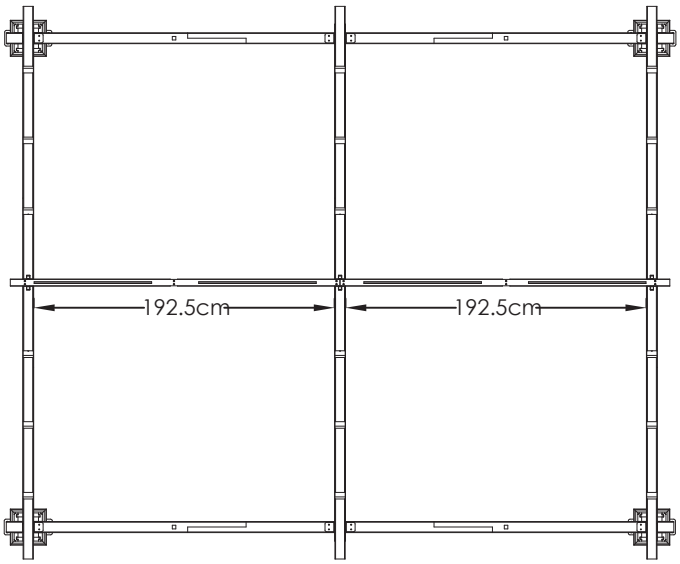

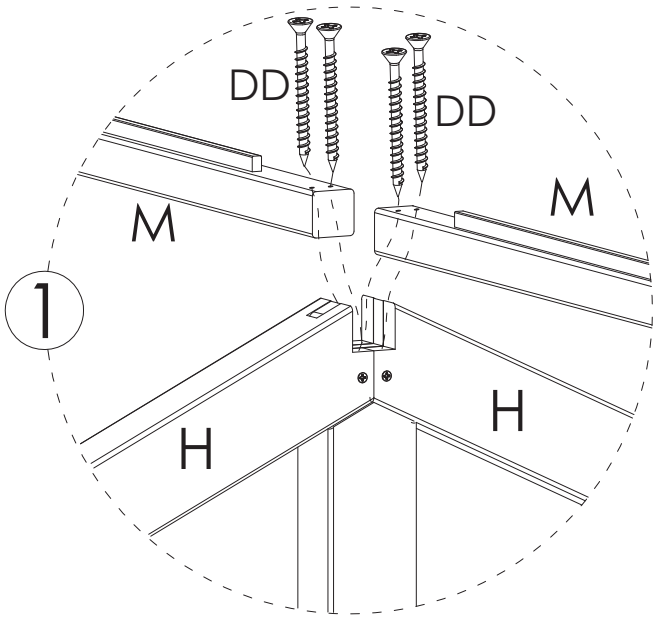

Step 11: Roof Rafter

Insert the roof rafter (M) into the roof rafter (H) mortise on peak, and secure with wood bolts (DD) as shown in fig. 1.

U

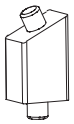

x 4

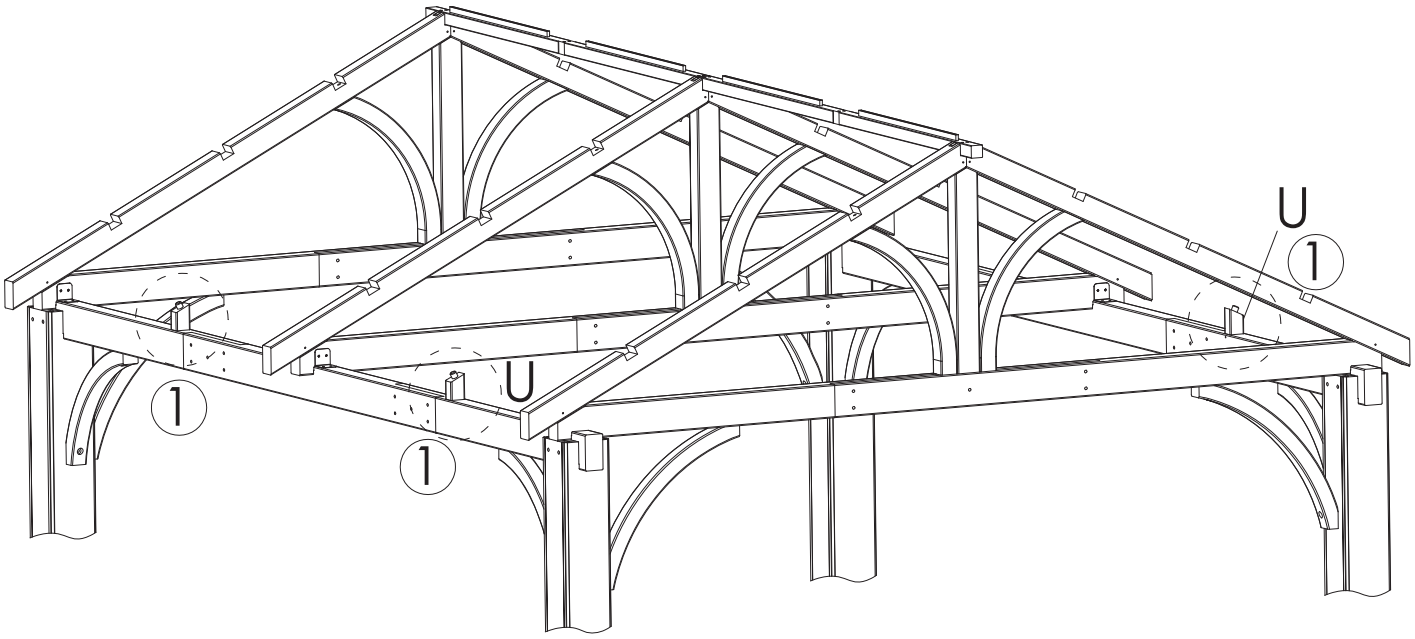

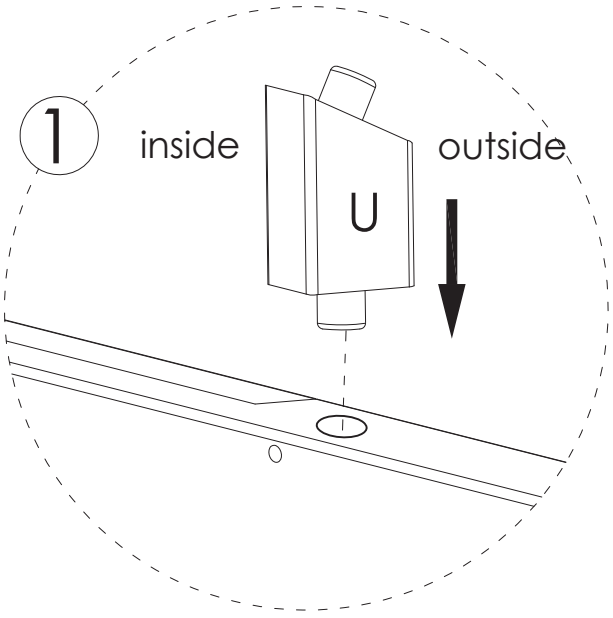

Step 12: Support Wood

Insert support wood (U)onto long crossbar set (D1&D2&D3) groove as shown in fig. 1.
Repeat this step for the remaining support woods (U).
Note: The small rectangle of support woodfaces outside of gazebo, and the big rectangle faces inside.

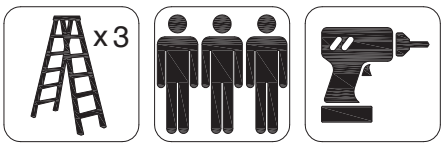

K		x 4	CC		x 4
V		x 2	DD		x 8

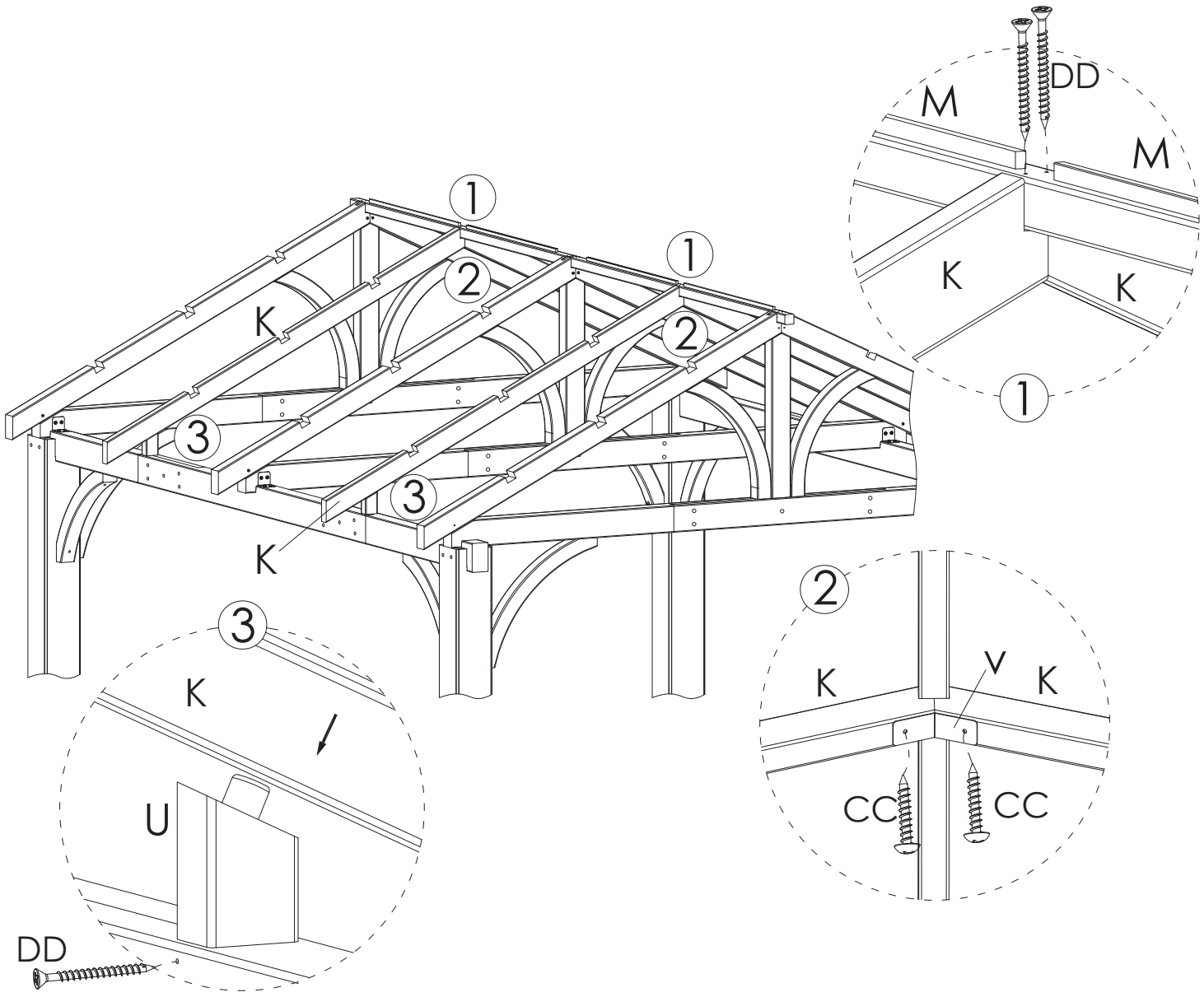

Step 13: Roof Rafter

Secure roof rafter (M) on roof rafter (K) by using wood bolts (DD) align the part in position as shown in fig. 1.

Secure V shape bracket (V) under roof rafter (K) by using self tapping screws (CC) as shown in fig. 2.

Place roof rafter (K) onto support wood (U) align the part in position, and secure support wood (U) by using wood bolts (DD) as shown in fig. 3.

L 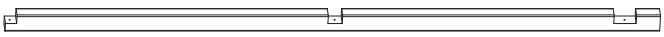 x 12	DD x 36

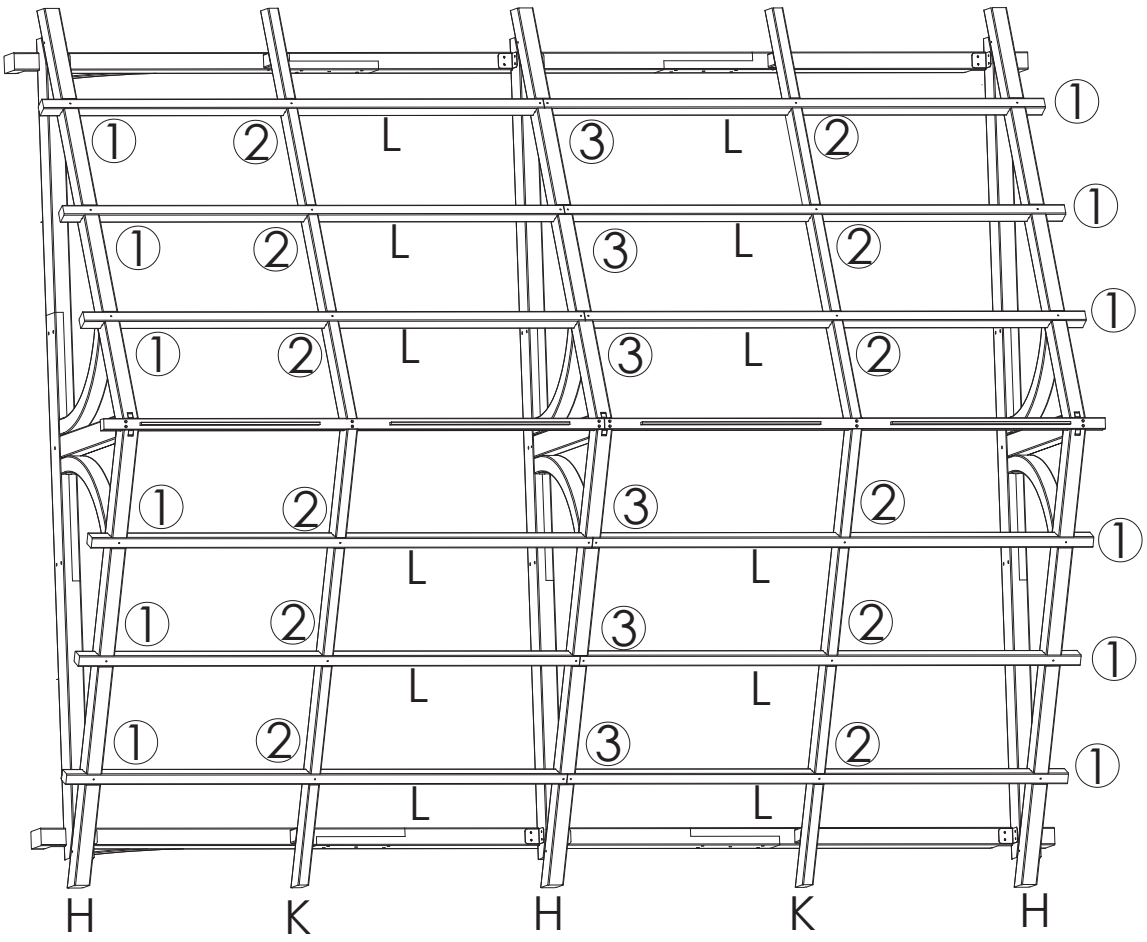

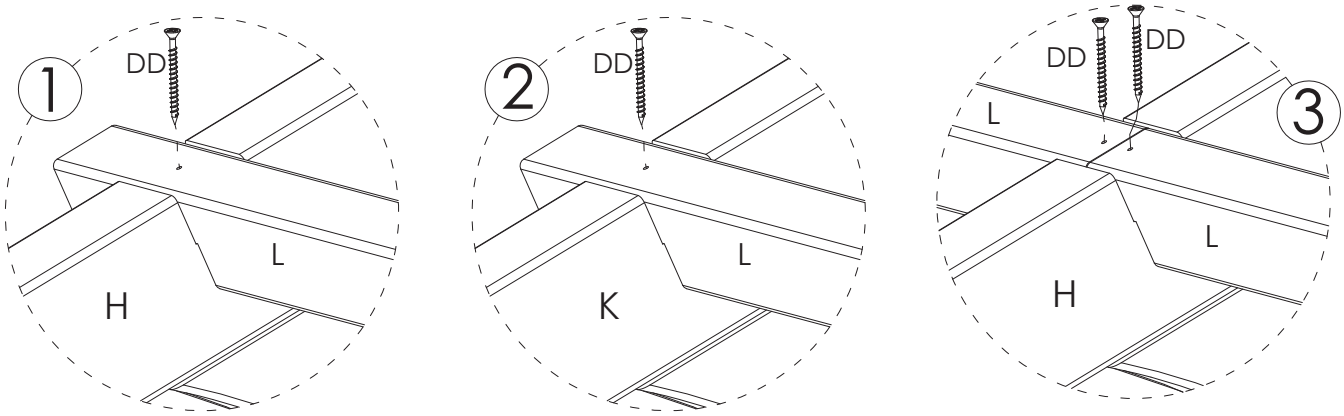

Step14 : Roof Support Rafter

Secure roof support rafter (L) onto roof rafters (H) and roof rafter (K) by using wood bolts (DD) align the part in position as shown in fig. 1, fig. 2 and fig. 3.

Repeat same procedure for the rest roof support rafters (L).\M+200FF\M+200FF\M+200FF

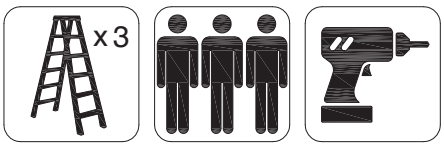

N		x 4	DD		x 16

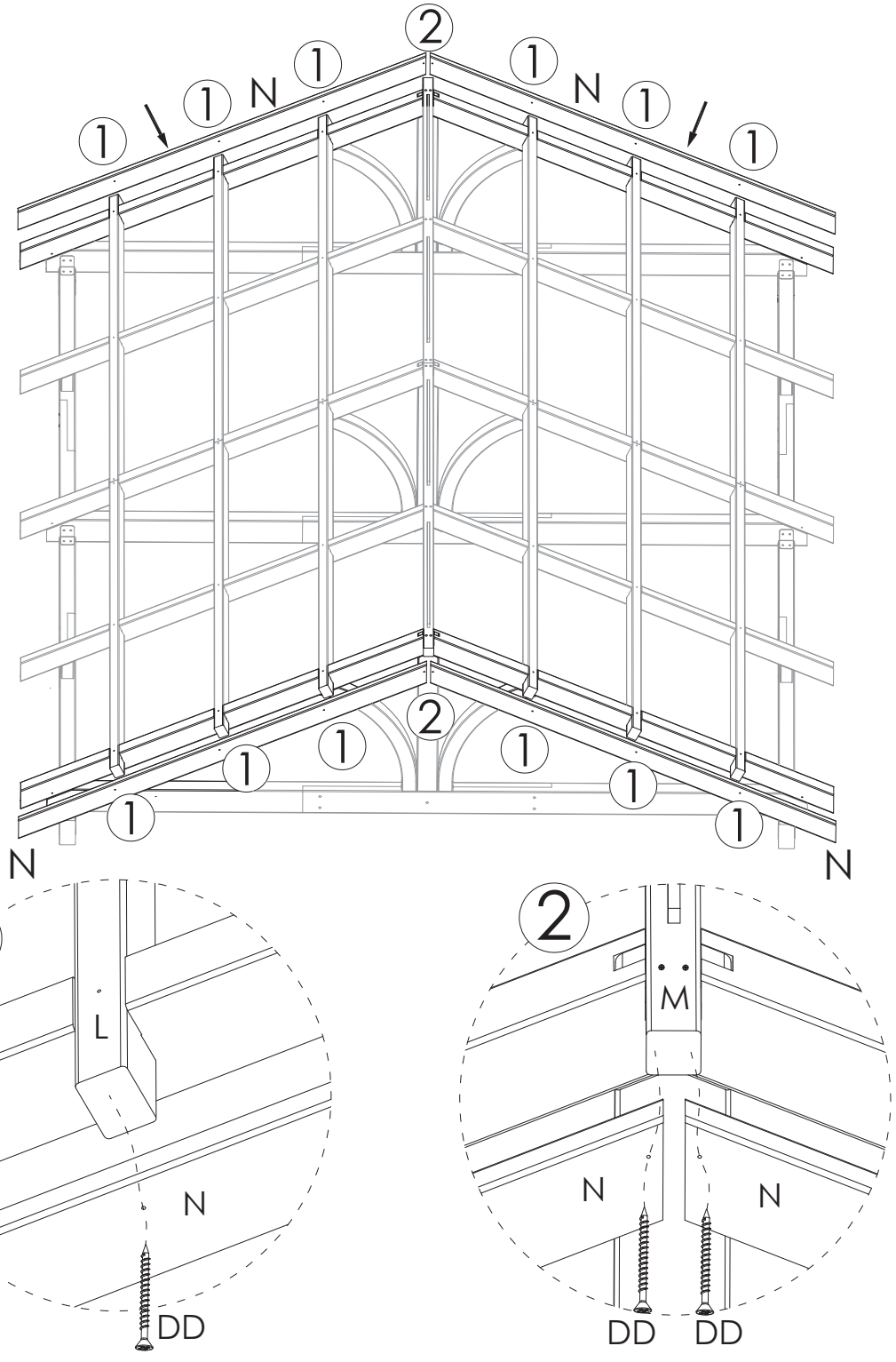

Step15 : Roof Rafter

Secure roof rafter (N) with roof support rafters (L) and roof rafter (M) by using wood bolts (DD) align the part in position as shown in fig. 1 & 2.
Repeat same procedure for the rest roof rafters (N).

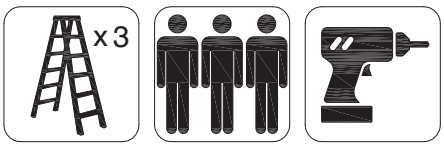

O1		x 2
O2		x 2

DD x 20

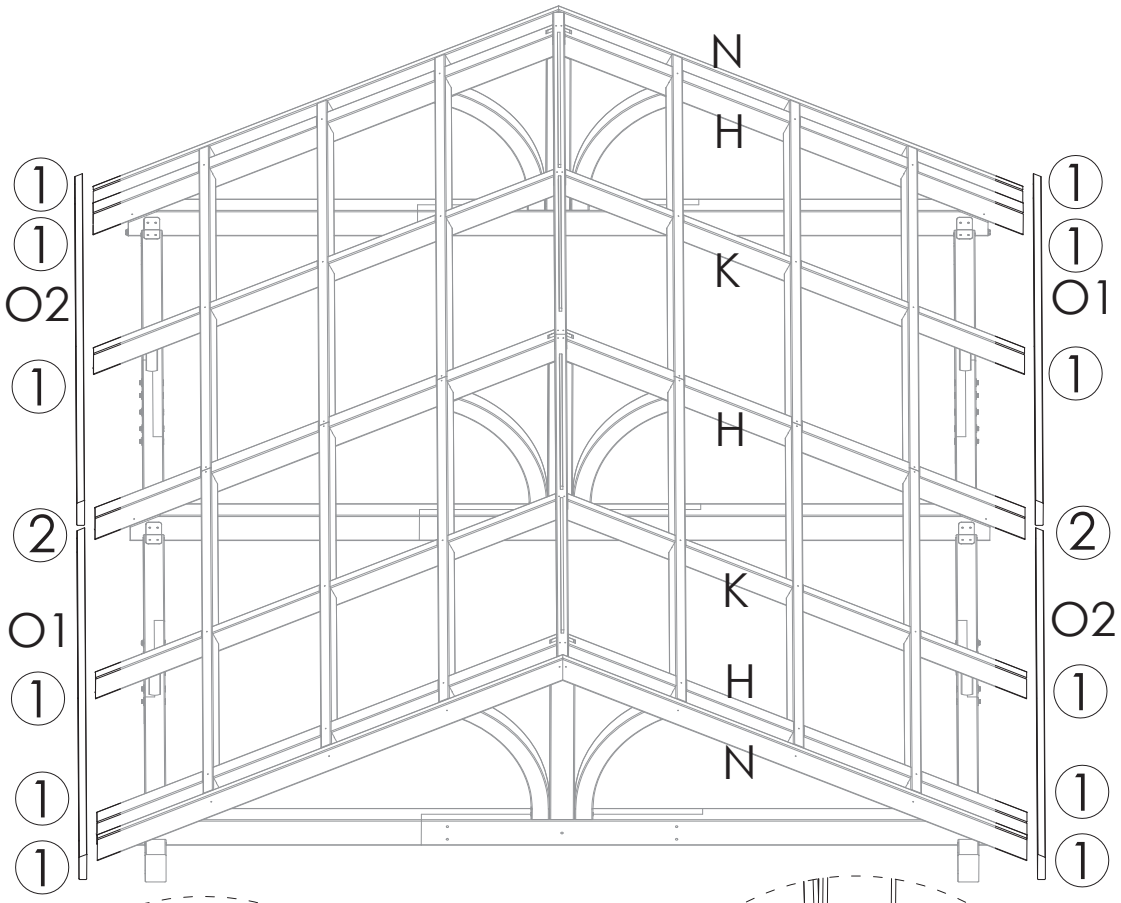

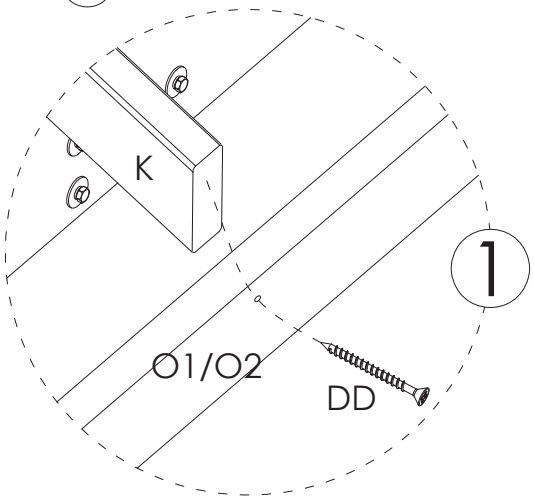

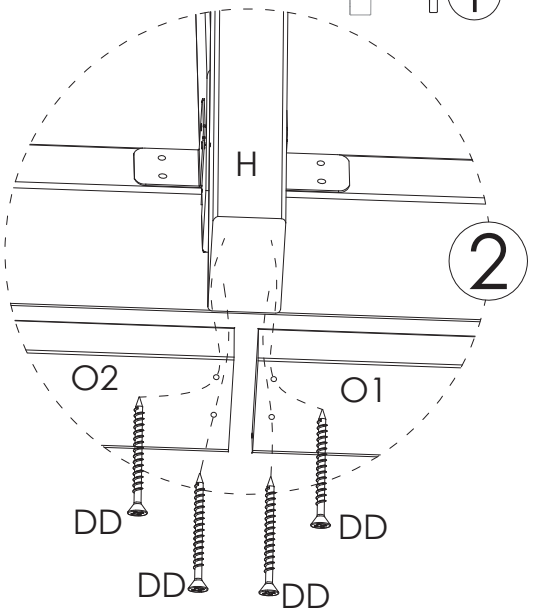

Step 16: Side Rafter

Secure side rafter (O1) and side rafter (O2) with roof rafters (K), roof rafters (H) and roof rafters (N) by using wood bolts (DD) align the part in position as shown in fig. 1 and fig. 2. Repeat same procedure for the opposite side.

P		x 2
CC		x 4
HH		x 4

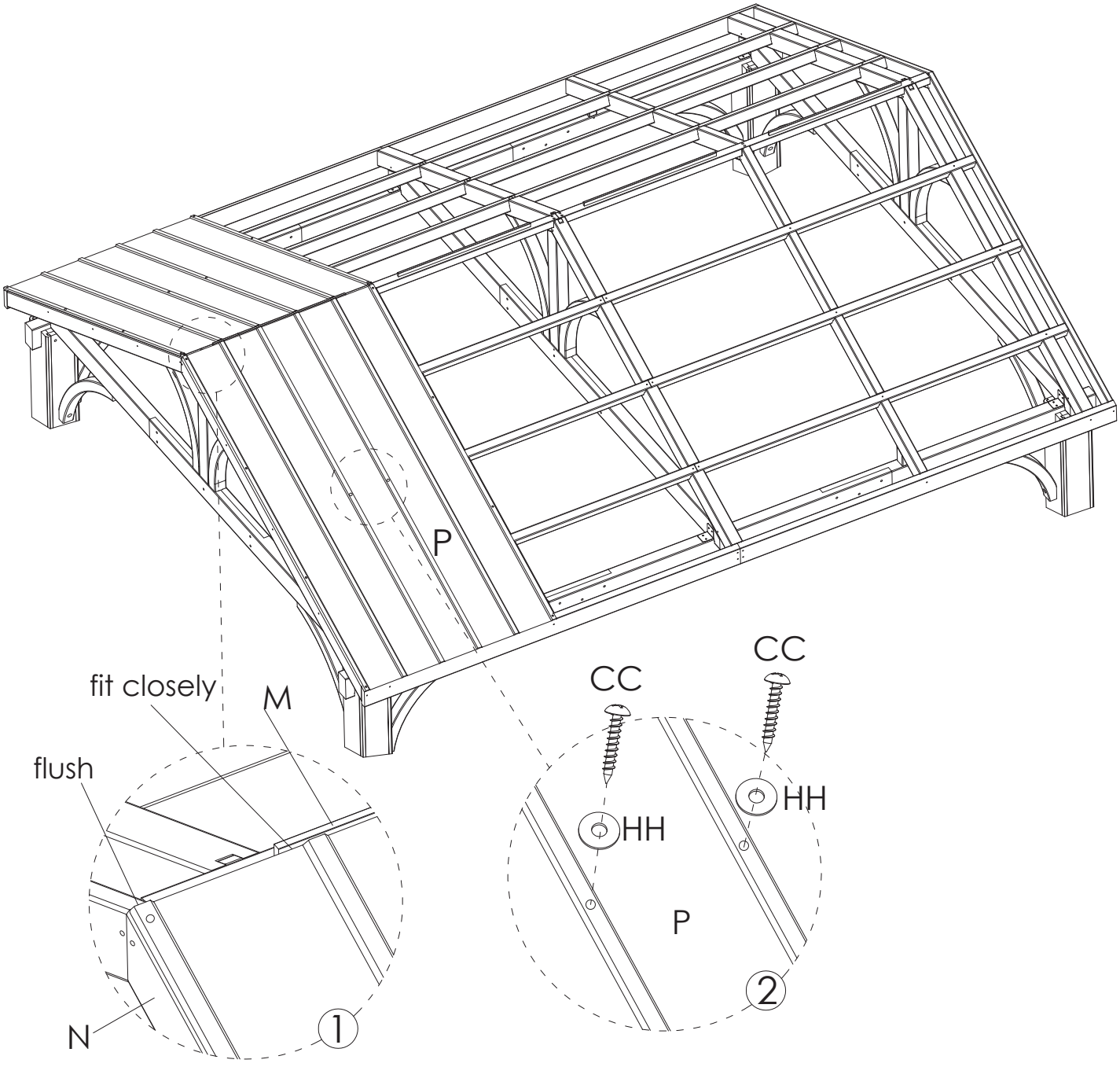

Step 17: Roof Panel

Place the first roof panel (P) on the left side of roof top. Notice the edges of roof panel (P) and roof rafter (N) are flush; also the edges of roof panel (P) and roof rafter (M) are fit closely as shown in fig. 1.

Secure roof panel (P) by using self tapping screws (CC) & plastic washers (HH) as shown in fig. 2. (Note: Only secure two holes on middle of panel for this step.)

Repeat same procedure to insert the second panel for opposite side.

P		x 2	CC		x 10
R		x 1	HH		x 10

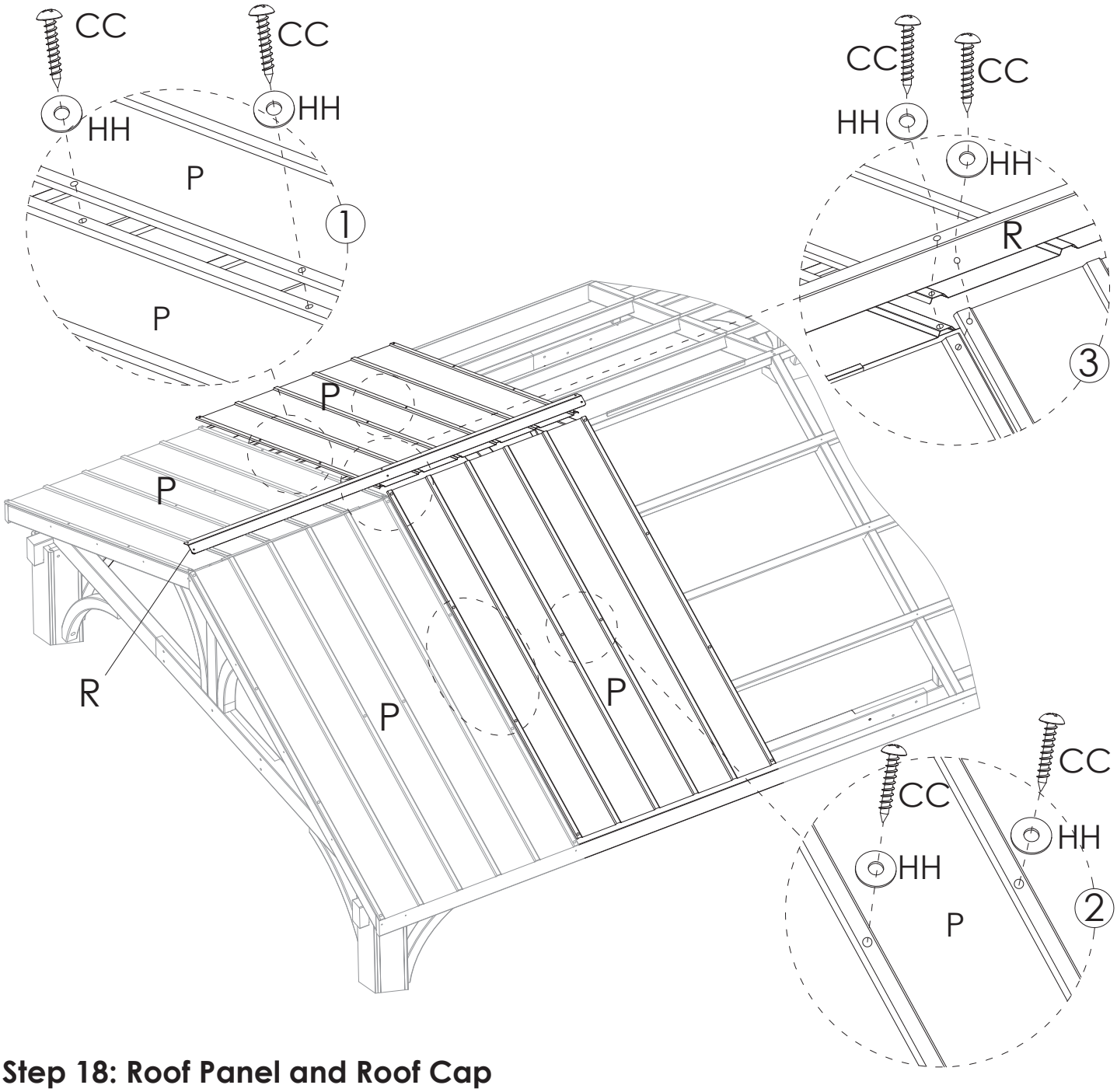

Step 18: Roof Panel and Roof Cap

Place the third roof panel (P) and overlap the first roof panel (P). Secure the roof panels by using self tapping screws (CC)& plastic washers (HH) as shown in fig. 1 and fig. 2.
Repeat same procedure to insert the forth roof panel (P) for opposite side.
Secure the roof cap (R) on ridge and overlap the edges of roof panels (P) by using self tapping screws (CC) & plastic washers (HH) asshown in fig. 3.

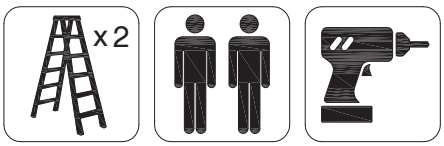

P		x 2
R		x 1

CC		x 10
HH		x 10

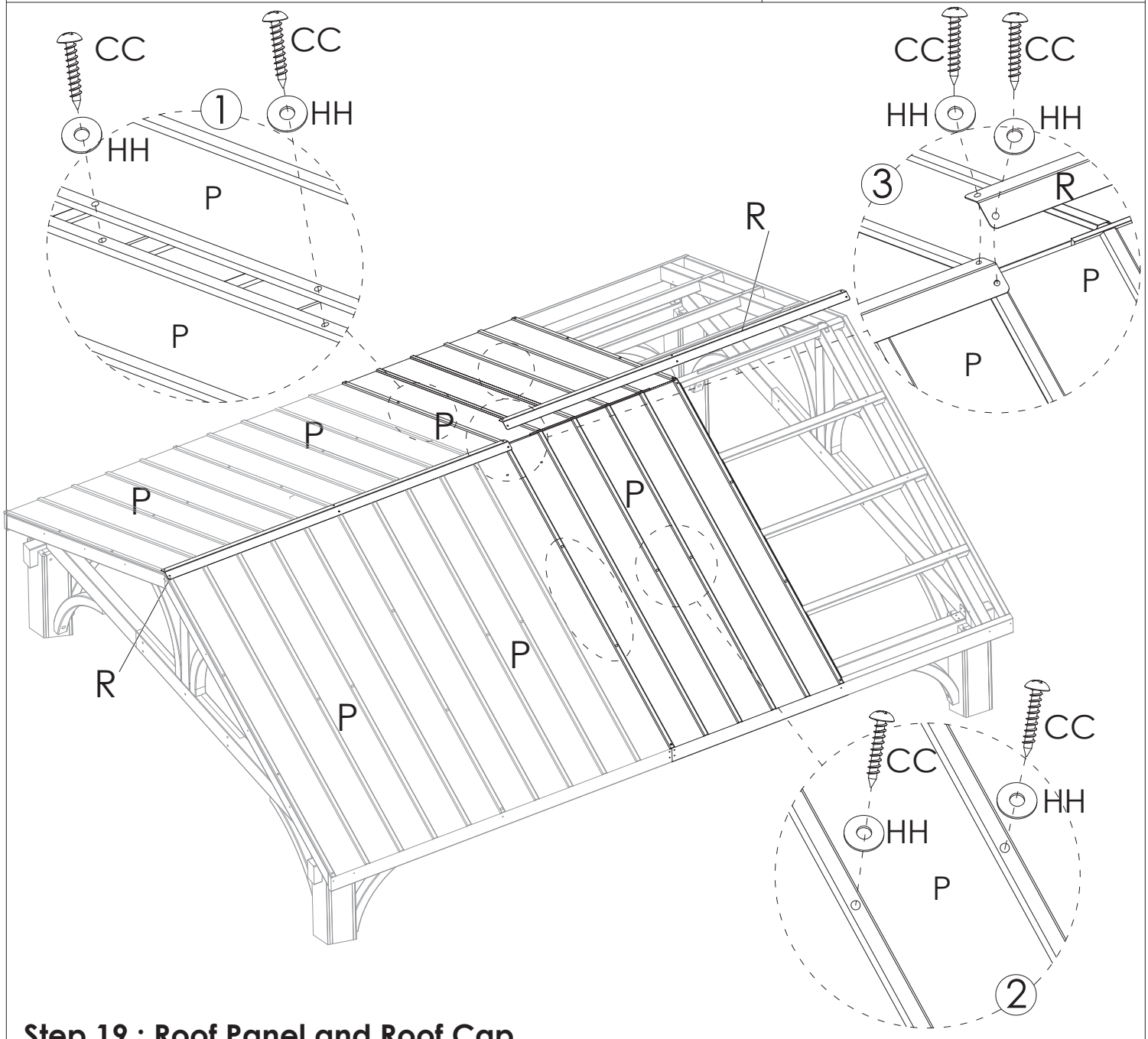

Step 19 : Roof Panel and Roof Cap

Same as Step 18, Place the fifth roof panel (P) and overlap the third roof panel (P). Secure the roof panels by using selftapping screw (CC) & plastic washer (HH) as shown in fig.1 and fig. 2. Repeat same procedure to insert the sixth roof panel (P) for opposite side.Secure the roof cap (R) on ridge and overlap the edges of roof panels (P) by using self tapping screws.

P		x 2
CC		x 10
HH		x 10

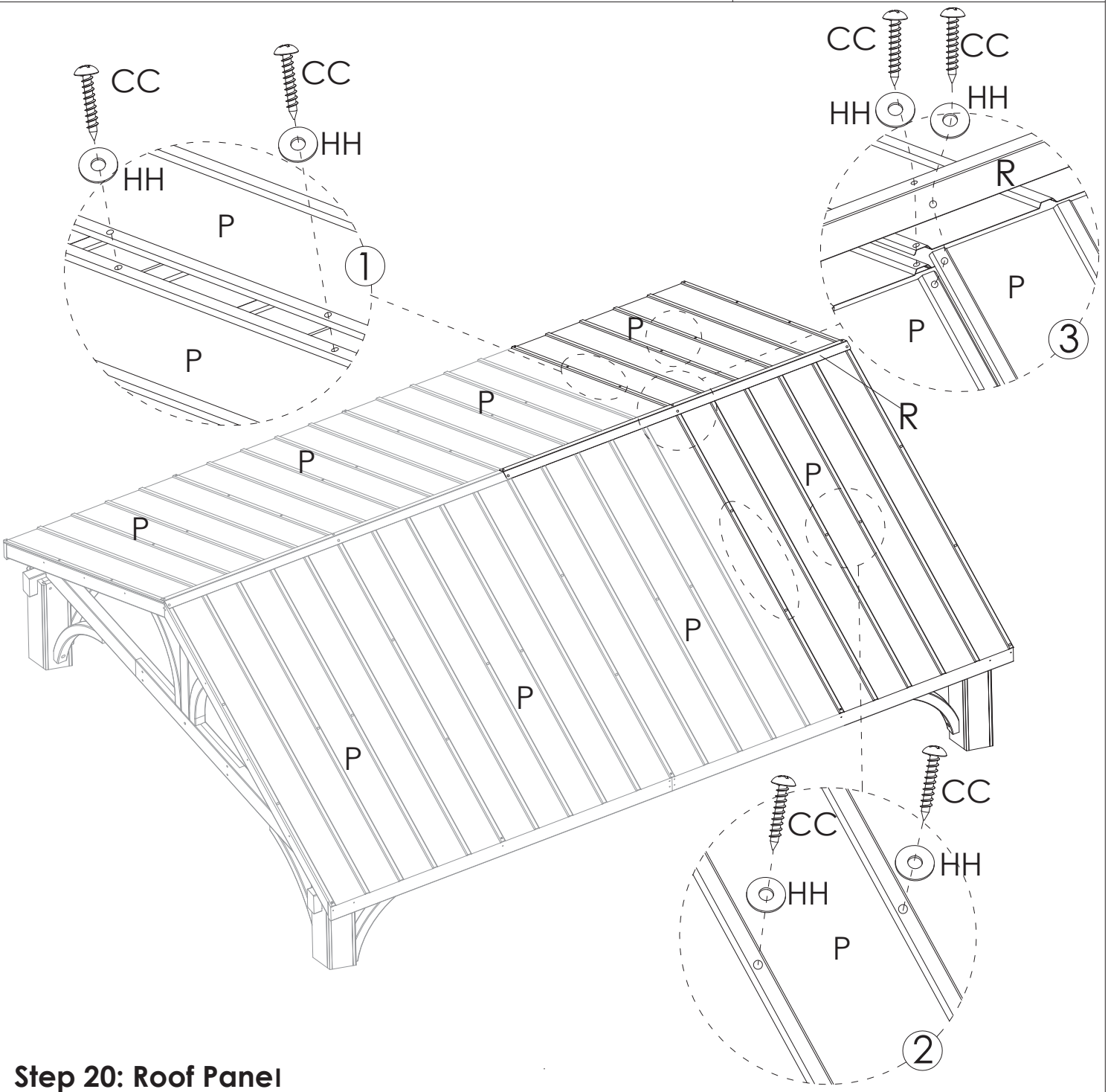

Step 20: Roof Panel

Lay down the seventh roof panel (P) under the roof cap (R) and overlap the fifth roof panel (P).Secure the roof panel by using self tapping screws (CC) & plastic washers (HH) as shown in fig. 1 and fig. 2.

Repeat same procedure for opposite side to insert the eighthroof panel (P) for opposite side.

Q1		x 2	CC		x 12
Q2		x 2	HH		x 12

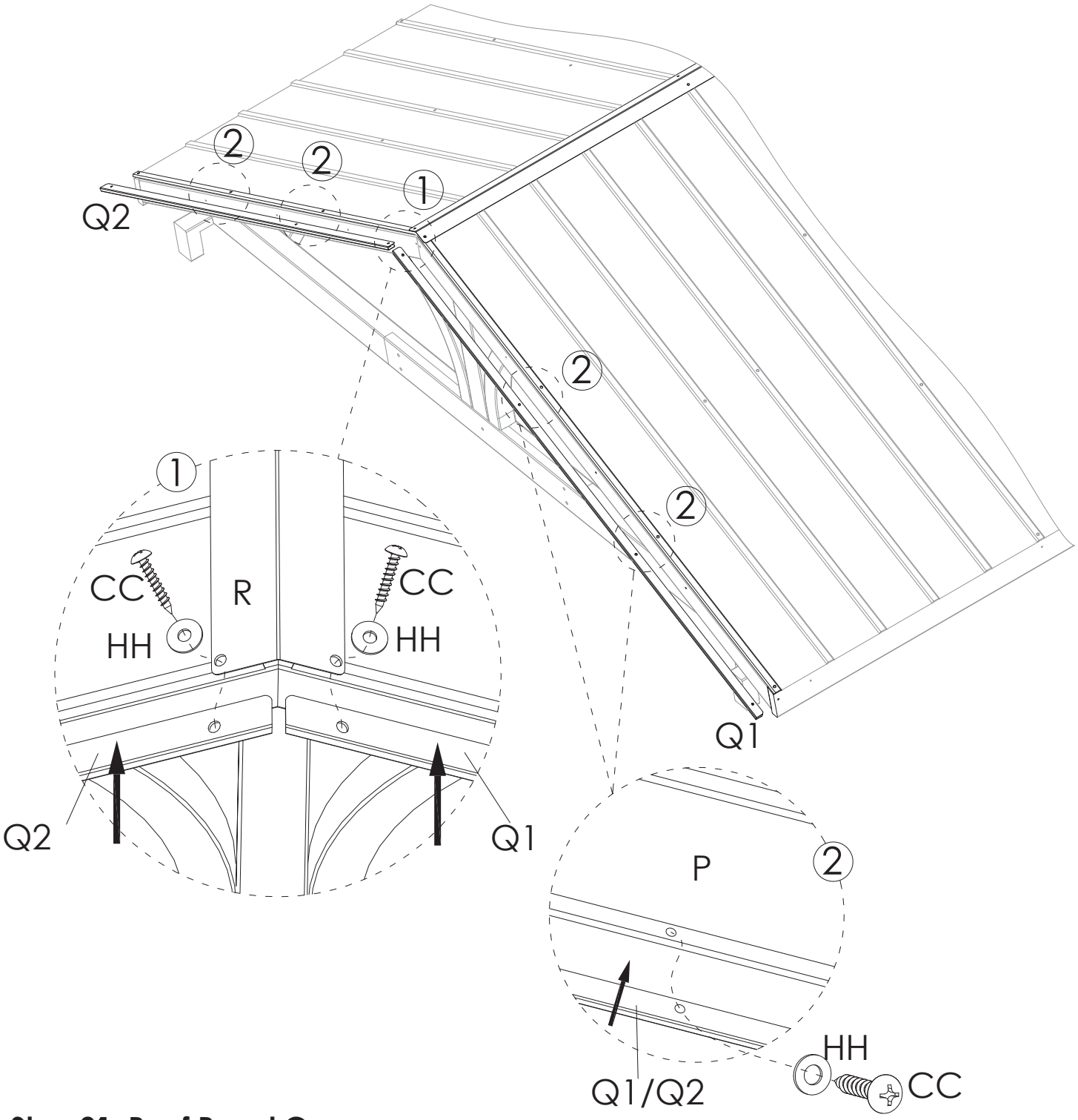

Step 21: Roof Panel Cap

Insert roof panel cap (Q1) and roof panel cap (Q2) to cover the edges of roof panels (P) and under roof cap (R) , secure by using self tapping screws(CC) and plastic washers (HH)as shown in fig. 1 and fig.2.

Repeat same procedure for opposite side.

S1		x 2	CC		x 10
S2		x 2	HH		x 10

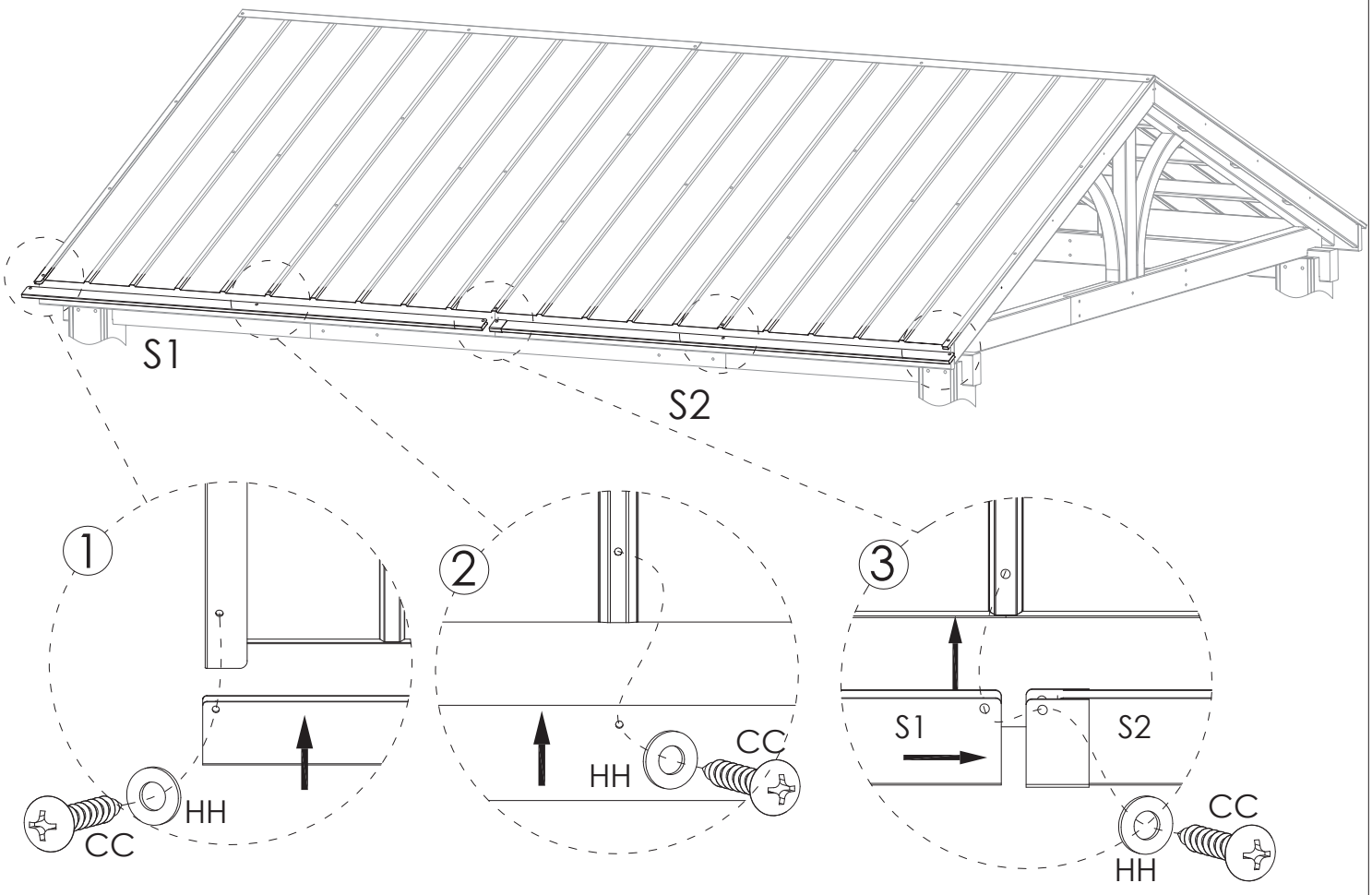

Step 22: Roof Panel Profile

Insert roof panel profile (S1) and roof panel profile (S2) to cover the edges of roof panel caps (Q1/Q2) and roof panels (P), secure by using self tapping screws (CC) and plastic washers (HH) as shown in fig. 1 , fig.2 and fig.3.

Repeat same procedure for opposite side

X

x 16

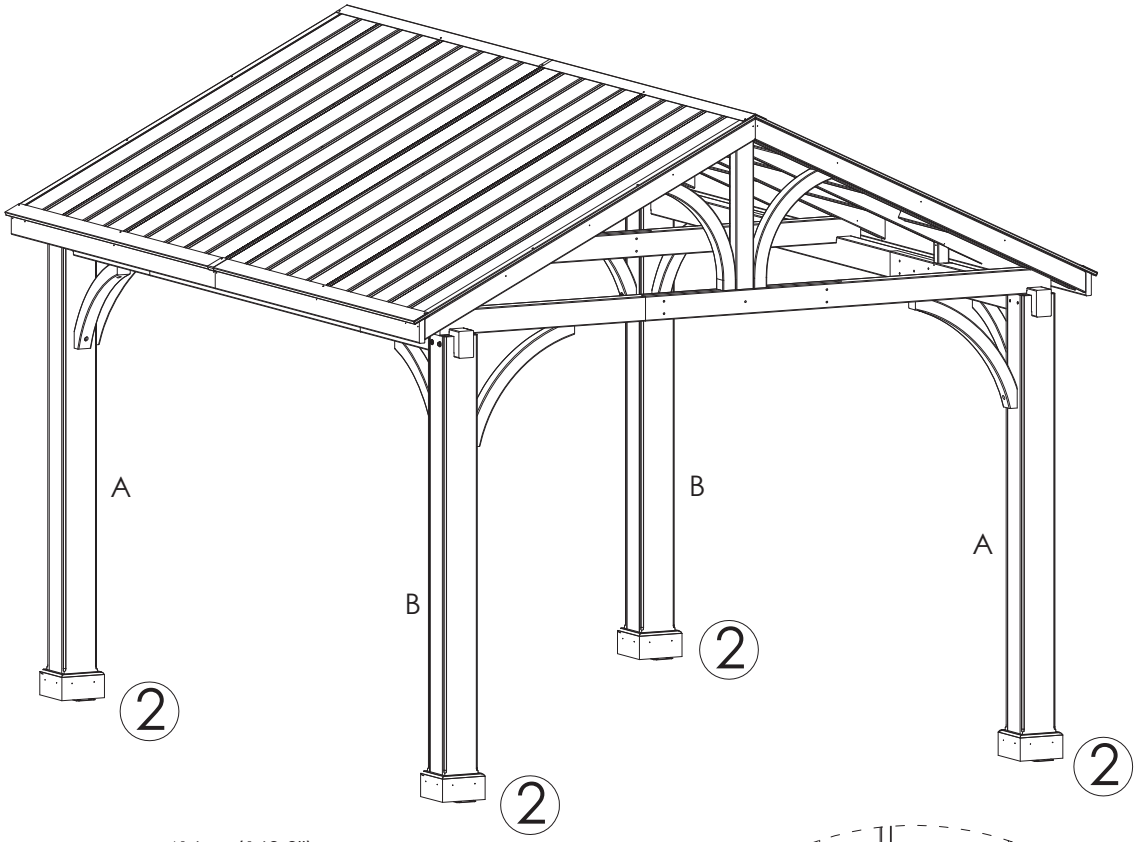

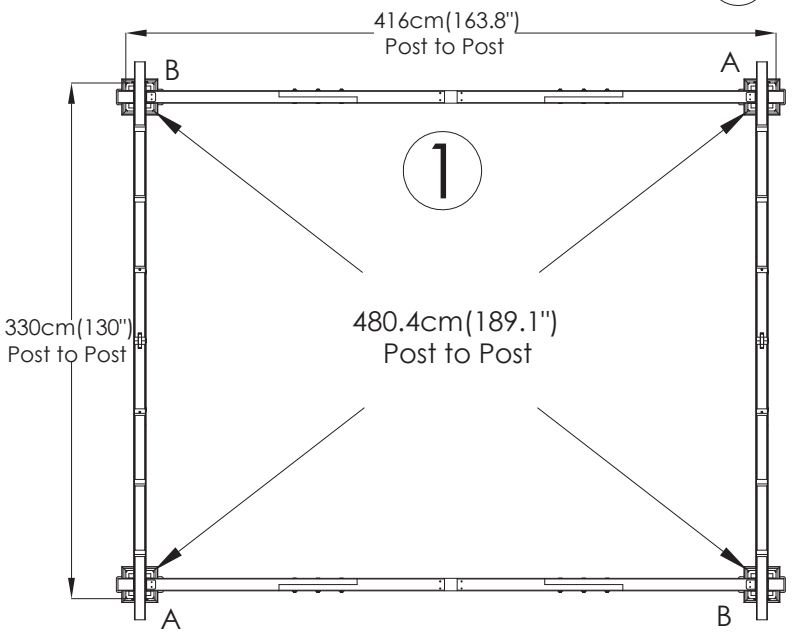

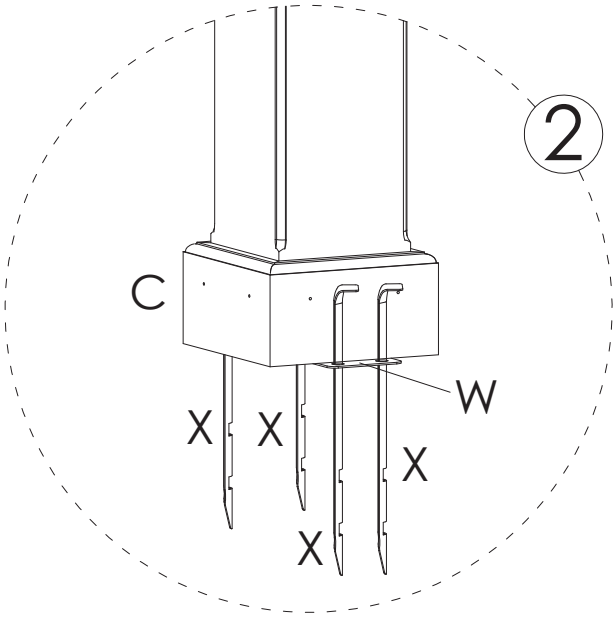

Step 23: Stake

Make sure each corner is square and level. Accurate and make sure the diagonal between posts (A-A) are equal to the diagonal between posts (B-B) as shown in fig. 1. Secure stakes (X) through base flange (W) into ground.

WARRANTY CONDITIONS

Any claim under this warranty must be made within 2 years of the date of purchase of the product. To make a claim under the warranty, take the product (with proof of purchase) to any Bunnings store (see www.bunnings.com.au or www.bunnings.co.nz for store locations).
Bunnings Group Ltd bears reasonable, direct, expenses of claiming under the warranty. You may submit details and proof to our store for consideration.
The warranty covers manufacturer defects in materials, workmanship and finish under normal use.
This warranty is provided in addition to other rights and remedies you may have under law: our goods come with guarantees which cannot be excluded under Australian Consumer Law or Consumer Guarantees Act 1995 (NZ). You are entitled to replacement or refund for a major failure and to compensation for other reasonably foreseeable loss or damage. You are also entitled to have the goods repaired or replaced if the goods fail to be of acceptable quality and the failure does not amount to a major failure.
The warranty excludes damage resulting from product misuse or product neglect.
The warranty covers domestic use only and does not apply to commercial applications.
This warranty is given by Bunnings Group Limited ABN 26 008 672 179, 16-18 Cato Street, Hawthorn East, Victoria 3123, e-mail: customer_service@bunnings.com.au; Bunnings NZ limited: Postal Address: PO Box 14436, Panmure, Auckland 1741, e-mail: marketing@bunnings.co.nz

WARRANTY EXCLUSIONS

Fading due to weather exposure or damage to the frame and fabric through accident, misuse or negligence.