MATADOR

Before using the BBQ, remove any packaging material within and around the BBQ supplied for protection during transit.

WOK BURNER

STAINLESS STEEL SIDE BURNER FOR BUILT IN BBQ

Retain manual for future reference.

CONTENTS

ASSEMBLY INSTRUCTIONS	3
LEAK TEST	4
LIST OF SPARE PARTS	5
MATADOR WARRANTY	7

CONTACT INFORMATION

For spare parts order from your nearest Bunnings Warehouse.

Australia for service and warranty queries, please go to the Garth support website: www.garthsupport.com or call 1800 427 841

New Zealand for service and warranty queries, please go to your local Bunnings warehouse or call 09-9782200, Fax 09-9782222, Email Marketing@bunnings.co.nz

www.matadorbbqs.com.au

MATADOR

ASSEMBLY INSTRUCTIONS

STEP 1

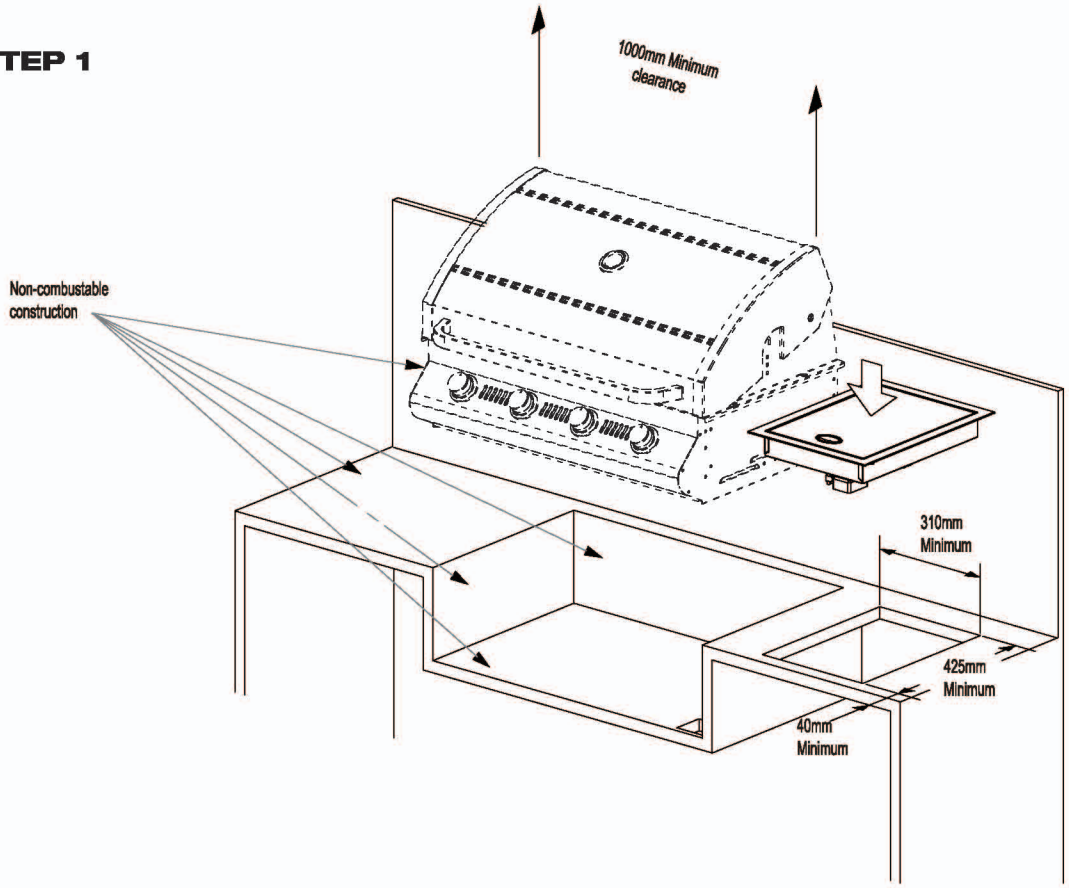

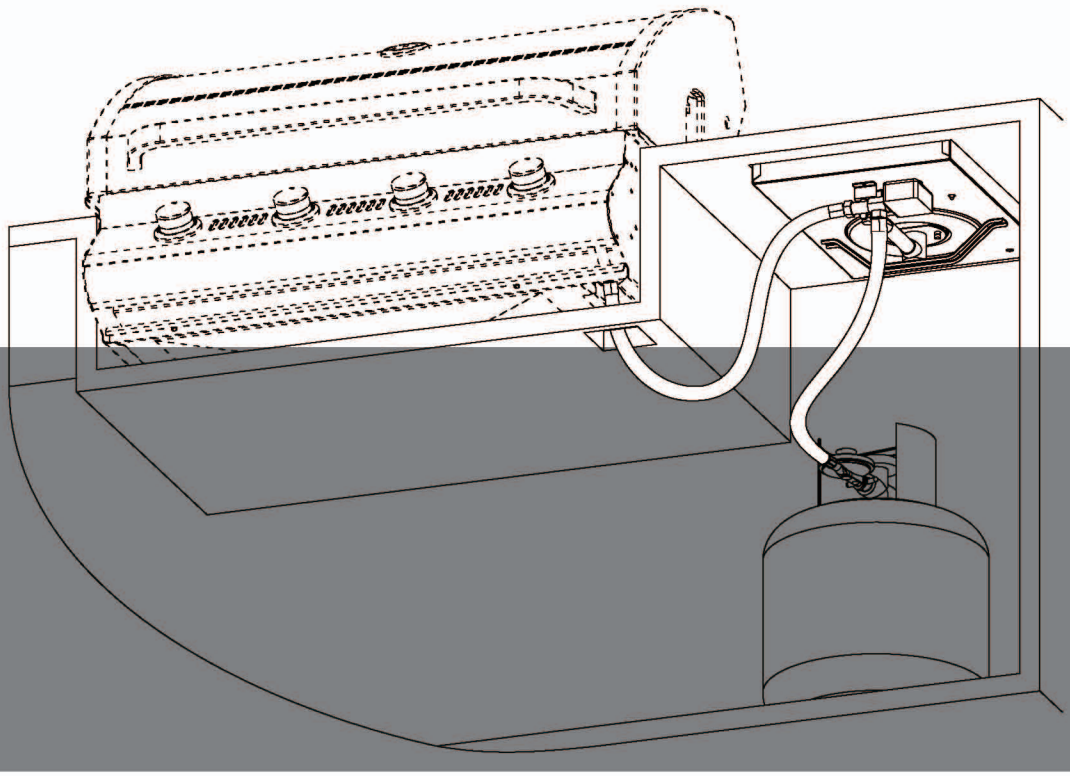

GAS LEAK TEST

①

TURN OFF THE GAS VALVE

②

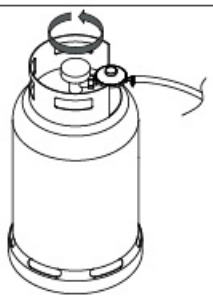

TURN OFF THE GAS BOTTLE

③ MAKE SOAPY WATER SOLUTION

④

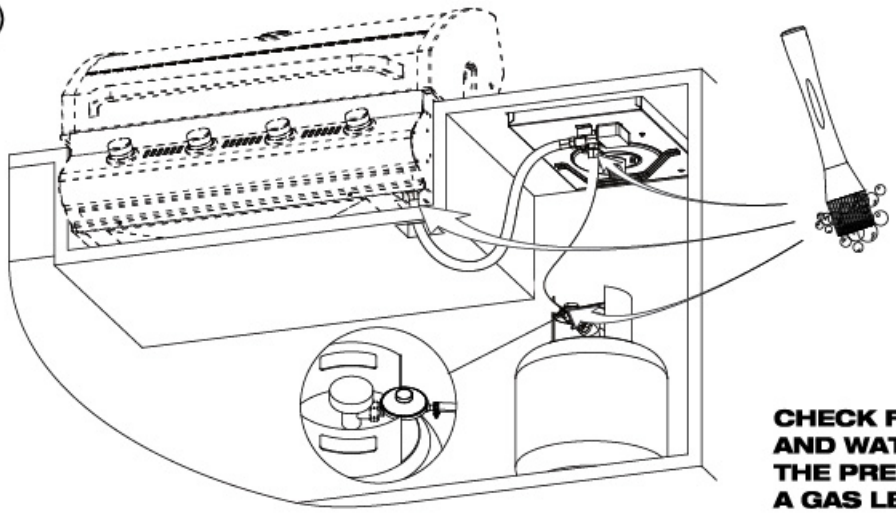

CHECK FOR LEAKS BY BRUSHING A SOAP AND WATER SOLUTION OVER ALL JOINTS. THE PRESENCE OF BUBBLES INDICATES A GAS LEAK.

⑤

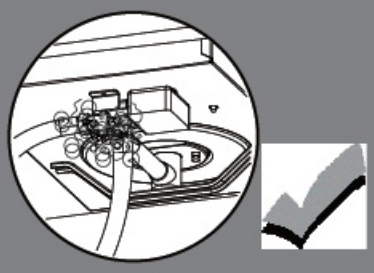

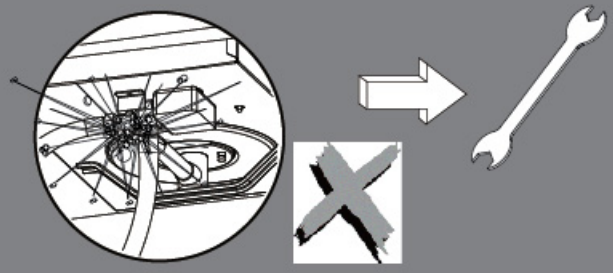

RE-TIGHTEN THE CONNECTION IF GAS LEAKAGE OCCURS

MATADOR

LIST OF SPARE PARTS

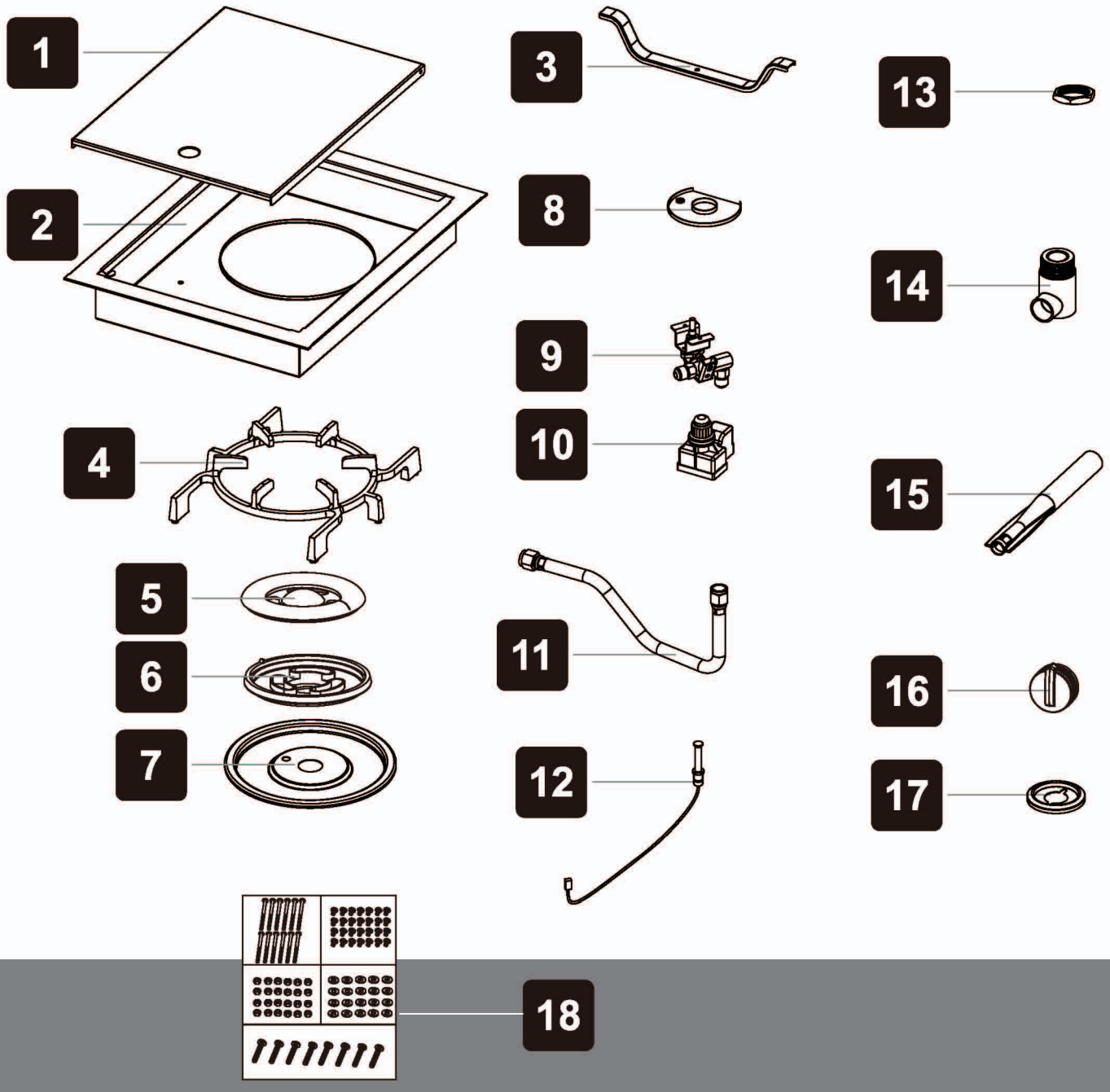

PART NUMBER	PART NAME	SUPPLIER CODE	AVAILABLE OR NOT
1	Side Burner Lid	B288-14-SB-01	
2	Side Burner Base	B288-14-SB-02	
3	Side Burner Under Strut	SBLF03	
4	Side Burner Trivet	SB-101	
5	Wok Side Burner Top	TMB001-2	
6	Wok Side Burner Base	TMB001-1	
7	Spill Bowl	SB002	
8	Ignition Pin Holder	TMA0508	
9	Side Burner Valve (AU)	N0029A	
	Side Burner Valve (NZ)	N0029A-NZ	
10	Electronic Ignition	PI2P-032	
11	Side Burner Hose	RC1100	
12	Ignition Wire	Q3726 (BC-01)	
13	Wok Elbow Nut	TMA0503	
14	Wok Burner Elbow	TMA0504	
15	Venturi	TMA0506	
16	Control knob bezel	BS120415-C	
17	Control knob	BKNB-217A	
18	Bolt pack	BP-B310	

MATADOR WARRANTY

Thank you for purchasing one of our quality Matador Wok Burner.

YOUR MATADOR WOK BURNER IS COVERED AGAINST DEFECTS FOR A PERIOD OF 2 YEARS FOR PARTS AND LABOUR, REPAIR OR REPLACEMENT. THIS WARRANTY EXCLUDES SURFACE RUST AND DAMAGE CAUSED BY ABUSE OR NEGLECT.

CONDITIONS OF THE WARRANTY

- The appliance must be operated and maintained in accordance with the instructions supplied in the operating manual.
- Any repair does not extend the warranty period.
- Any parts other than original Matador parts will void this warranty.

Installation Conditions

- All installations must conform to the applicable Gas, Electrical and Building standards as laid down by the local codes for state or region.
- If the appliance is changed to natural gas (if applicable), it must be converted and installed by a licensed gas fitter.

FOR WARRANTY CLAIMS

Garth Australia Pty Ltd.
134 Hall Street
Spotswood
Victoria 3015
AUSTRALIA

Garth Support website: **www.garthsupport.com**
or call: 1800 427 841
email: australia@garthsupport.com

The warranty for New Zealand is given by
Bunnings NZ Ltd
PO Box 14436,
Panmure, Auckland, 1741
NEW ZEALAND

Tel: 09 –9782200
Fax: 09-9782222
Email: marketing@bunnings.co.nz

Any claim under this warranty must be made within 2 years of the date of purchase of the product.

Proof of purchase must be presented.

For Australian Customers

To make a claim under the warranty please contact Garth support website: **www.garthsupport.com**
or return the product (with proof of purchase) to any Bunnings store. (see: www.bunnings.com.au for store locations)

Garth Australia bears reasonable, direct expenses of claiming under the warranty.

The warranty covers manufacturer defects in materials, workmanship and finish under normal use.

This warranty is provided in addition to other rights and remedies you may have under law: our goods come with guarantees which cannot be excluded under the Australian Consumer Law. You are entitled to replacement or refund for a major failure and to compensation for other reasonably foreseeable loss ordamage. You are also entitled to have the goods repaired or replaced if the goods fail to be of acceptable quality and the failure does not amount to a major failure.

The warranty excludes damage resulting from product misuse or product neglect. The warranty covers domestic use only and does not apply to commercial applications

For New Zealand Customers

To make a claim under the warranty, take the product (with proof of purchase) to any Bunnings store (see www.bunnings.co.nz for store locations).

Bunnings NZ Ltd bears reasonable, direct expenses of claiming under the warranty. You may submit details and proof to our store for consideration.

The warranty covers manufacturer defects in material, workmanship and finish under normal use.

The warranty is provided in addition to other rights and remedies you may have under law: our goods come with guarantees which cannot be excluded under the Consumer Guarantees Act 1993 (NZ). You are entitled to replacement or refund for a major failure and to compensation for other reasonably foreseeable loss or damage. You are also entitled to have the goods repaired or replaced if the goods fail to be of acceptable quality and the failure does not amount to a major failure.

The warranty excludes damage resulting from product misuse or product neglect. The warranty covers domestic use only and does not apply to commercial applications.

Goods presented for repair may be replaced by refurbished goods of the same type rather than being repaired. Refurbished parts may be used to repair the goods.

WHAT IS NOT COVERED IN THE WARRANTY

- Removal or re-installation costs. This warranty does not cover costs for transit, nor in home service.
- Liability will only be accepted for loss or damage during transit if at the time the product was being transported by Bunnings or a Bunnings approved contractor.
- Lack of maintenance, abuse, neglect, misuse, accidental or improper installation of this appliance.
- Scratches, dents, corrosion or discoloration caused by heat, abrasive chemical cleaners or chipping of porcelain enamel parts.
- Corrosion or damage caused by exposure to the elements such as insects, weather, hail or grease and fat fires.
- Rusting of cast iron plates, grills and burners.
- Cleaning and wear and tear; service calls of this nature are chargeable.
- Commercial use of the product.
- Unauthorized repairs or modifications during the warranty period.
- Glass breakage due to misuse or overheating
- Consumable items, example - batteries.

RECORD THE FOLLOWING INFORMATION

Attach the copy of the purchase receipt here:

Date of Purchase .....
Purchased From.....
Location.....
Model Name and Number .....
Serial Number .....
Receipt Number .....

Note: The serial number is located either on the outside of the packing carton or outside or inside the appliance.

FOR TECHNICAL ASSISTANCE

For Australia customers if you experience any technical issues with your Matador BBQ, in the first instance review the instruction manual or contact the warranty service agent below.

For New Zealand customers if you experience any technical issues with your Matador BBQ, in the first instance review the instruction manual or contact your local Bunnings warehouse.

FOR SPARE PARTS

Call your local Bunnings warehouse and ask them to order a part for you. You should provide the following information.

Model of Wok Burner .....
Year of purchase .....
Name of warranty service company above .....
Part that requires replacement (refer to the list of spare parts in the instruction manual) .....

MATADOR

Visit **www.matadorbbqs.com.au**

For technical and warranty support call

1800 427 841 (Aus)

0800 357 050 (NZ)

Your purchase receipt will be required for warranty claims.

For spare parts contact your local Bunnings Warehouse